Document Number:
XE-MAX1PM-OPERATION-R0A

FOAMPRO®
A Safe Fleet Brand

AccuMax II Fury/Fusion Foam Injection System

--- Vehicle Mounted & Fixed Systems ---

Pumper Systems

Level #1–500 to 1250 GPM
Foam Pro Models: #3020, #3040, #3060, #3090

Industrial Pumpers and Fixed Systems

Level #2:–1500 to 2500 GPM: Models #3150 & #3300
Level #3–3000 to 6000 GPM: Model #3300

OPERATION, SET-UP, CALIBRATION, SERVICE & PARTS MANUAL

MODEL MAX100

MODEL MAX200

Unit
Serial
Number _____

All quality FoamPro products are ruggedly designed, accurately machined, carefully assembled, thoroughly inspected and tested. In order to maintain the high quality of your unit, and to keep it in a ready condition, it is important to follow the instructions on care and operation. Proper use and good preventive maintenance will lengthen the life of your unit. ALWAYS INCLUDE THE UNIT SERIAL NUMBER IN CORRESPONDENCE.

FoamPro • 26 Southern Blvd. • Nesconset, NY 11767 USA • 800-533-9511 • FAX 816-892-3178

1. CONTENTS

Table of Contents

2. SAFETY

Safety Precautions

Throughout the AccuMax foam system installation manual, three (3) levels of precautions are denoted as follows:

CAUTION	**Cautions are used to indicate the presence of a hazard, which will or may cause minor injury or property damage if the notice is ignored.**
WARNING	**Warnings denote that a potential hazard exists and indicates procedures that must be followed exactly to either eliminate or reduce the hazard, and to avoid serious personal injury, or prevent future safety problems with the product.**
DANGER	**Dangers are used to indicate the presence of a hazard that will result in severe personal injury, death, or property damage if the notice is ignored.**

WARNING

- Before operating an AccuMax Foam Injection System, read all of the following safety precautions and operating manual following all sections carefully.
- Proper ear protection must be worn while operating rotary gear pumps and foam/fire pump systems.
- Proper eye protection is required while operating and maintaining any foam/fire pump system.

DANGER

- The normal ambient operating temperatures for fixed and mobile foam system applications could vary from -40°F (-40°C) to 130°F (54°C). Special provisions shall be provided by the installer for both extremely low or high operating conditions.
- Maximum Operating Temperatures Inside of the Pump Enclosure: 160° F / 70° C.

3. INTRODUCTION

Overview: How the Foam System Works

The FoamPro AccuMax injection system is an electronically controlled, hydraulically driven, foam concentrate proportioning system designed to provide the wide range of foam concentrate injection rates necessary for foam operations. The FoamPro AccuMax system will accurately deliver from 0.1% to 10.0% foam concentrate.

The performance and accuracy of the foam system shall be in compliance to applicable sections of NFPA #1901 (mobile vehicle systems) or NFPA #20 (fixed systems). Please note: the installer shall be responsible for final compliance of the assembled foam installation, setup, and testing to meet NFPA or 3rd party testing requirements.

The FoamPro AccuMax system is a flow-based proportioning system that measures water flow through specified discharges or water manifold and injects the correct proportional amount of foam concentrate to maintain the desired percentage. The basic system is comprised of the following five (5) assemblies for 1 to 15 foam line injectors and discharges:

a. **Hydraulic System**: FoamPro shall furnish the hydraulic pump, hydraulic motor, and hydraulic controller shall be supplied by Foam Pro. The hydraulic cooler and reservoir can be supplied by the final installer or Foam Pro.

b. **Foam System:** FoamPro shall furnish foam line Injectors (FLI) for water manifold (single-point) or each discharge (multi-point), low-flow assembly, Fury or Fusion foam displays, main foam flowmeter, foam pressure transducer, FRC TankVision level display (or optional low-level sensor), and cabling for the foam system.

c. **Electrical System:** FoamPro shall furnish displays and controls, electrical communication system, and cabling. The final installer shall supply power supply fusing and wiring.

d. **Foam Pump Components:** FoamPro shall furnish foam pump, relief valve, and foam pump inlet wye strainer.

e. **Water Discharge Components:** FoamPro shall furnish water flowmeter & pressure transducer (single-point) or water flowmeters and pressure transducers on each discharge (multi-point). Fusion and APEX systems have Elkhart electric valves furnished by Foam Pro.

The hydraulic controller operates the hydraulic drive system to supply the proper amount of foam concentrate required for the AccuMax operation and foam line controllers in use. A ‘wye’ strainer shall be installed before the foam pump to protect the positive displacement foam pump from debris. A safety pressure relief valve shall be installed downstream of the foam pump to recirculate foam to the suction side of the foam pump. This relief valve shall be supplied by FoamPro and approved by the foam pump manufacturer. Hydraulic power to operate the foam pump shall be provided by a separate hydraulic pump, in mobile systems shall be driven by the transmission mounted PTO and fixed systems by an electric motor or diesel engine. The foam concentrate line (from the foam pump) shall have a pressure transducer to control the hydraulic system.

The foam line controller (FLI) shall consist of foam flowmeter, foam control valve, foam injection check valve, and a calibrate/inject valve. The AccuMax Fury or Fusion or Fusion/Apex displays communicate the proper information to ensure the proper amount of concentrate is dispensed to the foam manifold or to the discharge that it controls.

The AccuMax II displays are in constant communication with hydraulic controller, foam line injector (FLI), water pressure transducer(s), and water flowmeter(s) to determine the correct amount of foam concentrate required and to control the hydraulic pump to provide the hydraulic flow to drive the foam pump to deliver the proper amount of foam concentrate. Additionally, the AccuMax system monitors the foam flow through the master foam flowmeter from the discharge of the foam pump. The AccuMax Fusion or Fury display menu allows the operator in “menu mode” to display various functions and settings for foam system operator information.

The constant comparison of the water flow and foam flow information by the AccuMax system ensures the desired proportion of foam concentrate, based on water flow rate, independent of any variations in fire pump intake or discharge pressures. As water flow increases or decreases, the foam concentrate rate of injection is increased or decreased automatically to correspond to water flow, maintaining the proper concentrate percentage as selected on the FLI injector. It also controls the foam control valve to allow the proper amount of foam concentrate to be injected into water manifold or individual discharge lines based on the input requirements controlled by the fire pump operator and the information supplied by the foam flowmeter(s) and the water flowmeter(s) regardless of operating pressure.

Each FLI controller operates independently and all FLI assembly(ies) shall communicate with the AccuMax software for total system operation. With a single-point FLI, one pressure transducer is provided. On multi-point Fusion system, a specified number of FLI controllers and water pressure transducers are provided; installed on each discharge (to indicate discharge "line pressure" readings). Foam concentrate shall be injected directly into the water manifold or into each discharge of specified foam/water discharges.

The water line flowmeter measures the water flow and sends a signal to the display(s). A water pressure transducer shall be installed on the water manifold (single-point) or each water/foam solution discharge line.

On vehicle mounted systems: 12/24-volt electrical power to operate the foam system shall be provided by the chassis electrical system.

On fixed systems: 12/24-volt electrical power to operate the foam system shall be provided by a separate battery and charger system by the installer. In both electrical systems, the final installer shall be responsible for power supply wiring and fuse protection per the electrical section of the installation manual.

4. FOAM SYSTEM DRAWINGS – BASIC

Basic Drawings for Each System

Drawing #1–Fury Single-Point

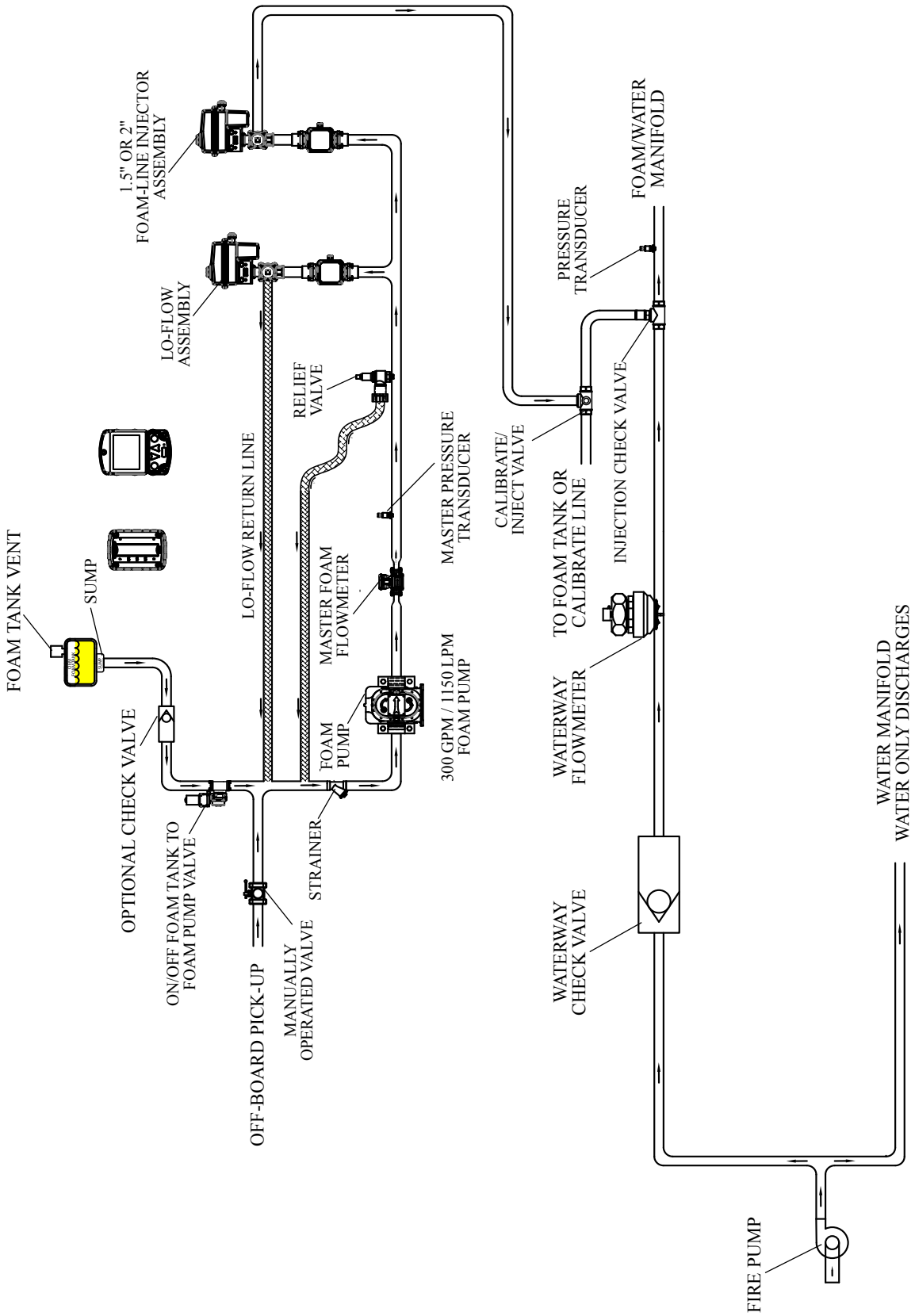

Drawing #2–Fury Multi-Point

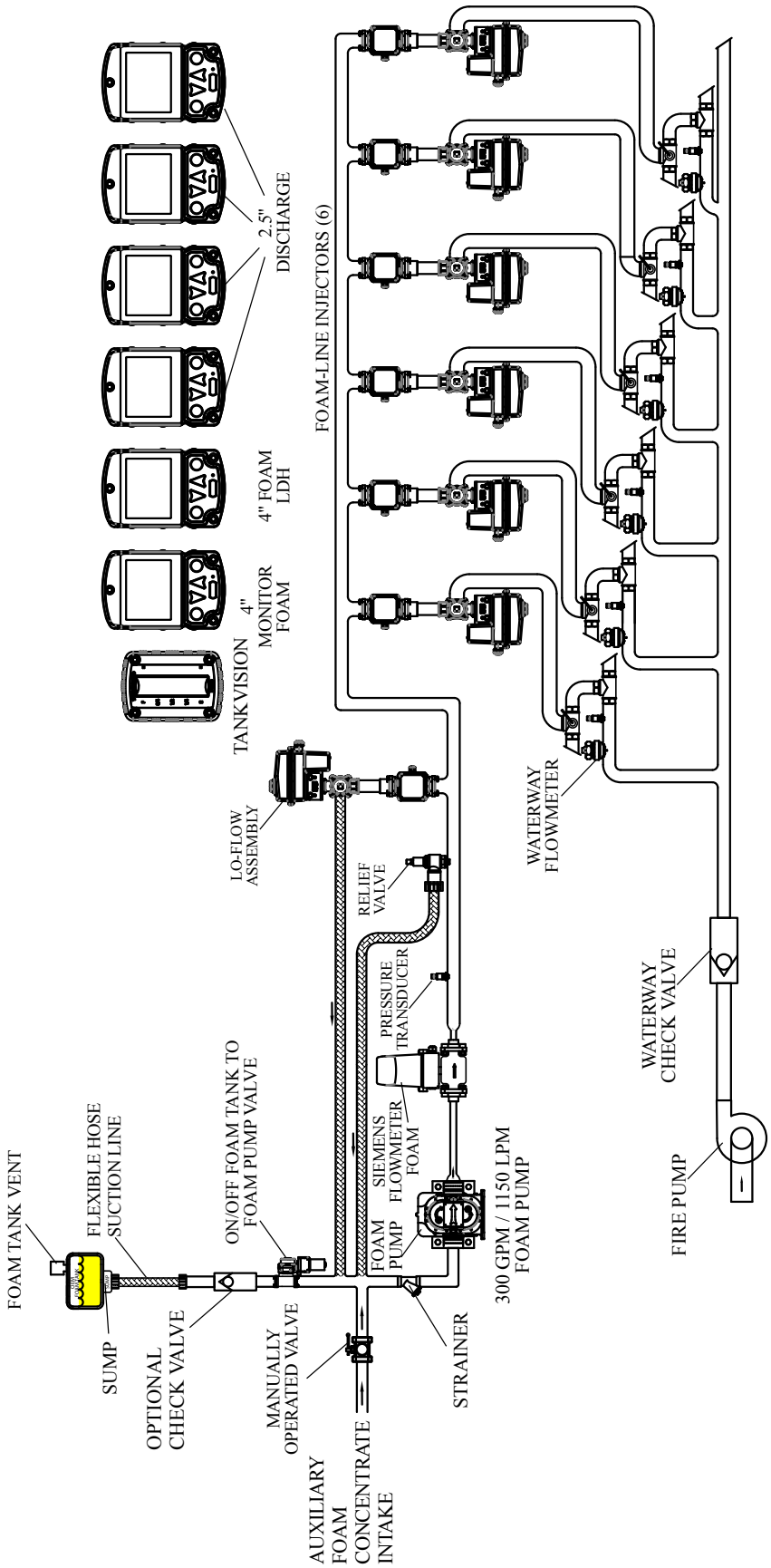

Drawing #3–Fusion Multi-Point

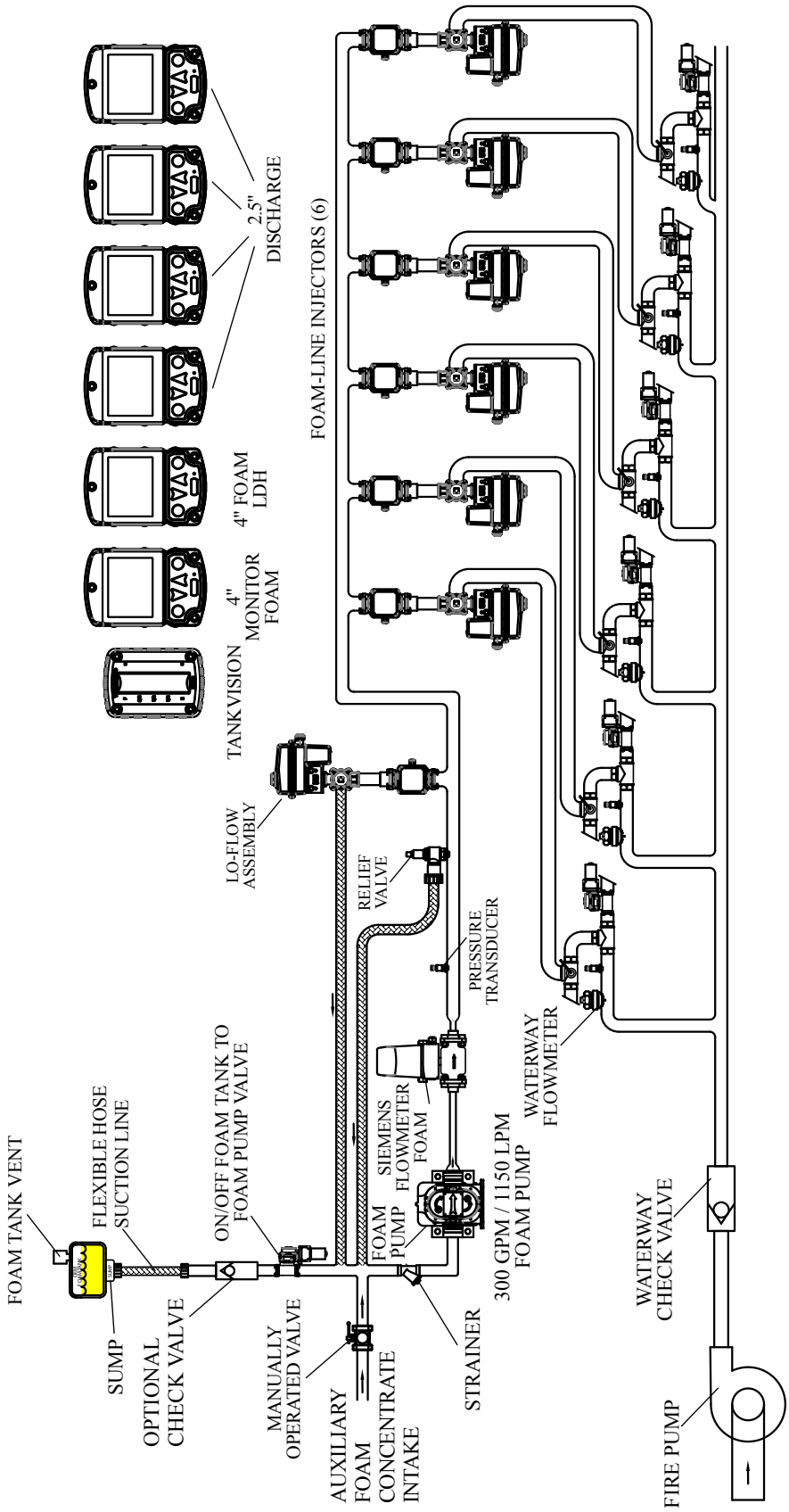

5. DISPLAYS AND CONTROLS—ACCUMAX

Fury, Fusion and APEX Displays

Color-Coded Rain Guard

Fury, Fusion, and APEX displays shall be equipped with color-coded removable rain guard at the top of each display. The rain guard deflects water and dirt from running down the display. The colors shall comply to NFPA #1901 discharge line colors. The discharge display color shall match the discharge color (installer responsibility).

Displays: FURY, FUSION, APEX

High brightness LCD screen shall have numerical, alpha, and graphical displays for discharge and foam system operations. Each display (FURY, FUSION, and APEX) are unique, with various selectable buttons, menus, and functional operations. System messages and errors are shown through indicators on the display. See further details of the screen elements in the Operation manual. See further details of the screen elements in the later Sections in the Installation Manual #1 and Operation/Service/Parts Manual #2.

Foam Delivery ON/OFF Button

The RED button turns foam delivery to the manifold or discharges: **ON** or **OFF**. To turn ON or OFF, press and hold this button for two seconds. When foam delivery is ON, the foam concentrate will be delivered at a specified rate as soon as water flow from the discharge is detected.

Up/Down Buttons

The **YELLOW** buttons with **UP/DOWN** arrows control the foam proportioning rate adjustment either incrementally higher or lower.

a. When pressed once: a lower (**DOWN**) and higher (**UP**) preset for foam proportioning rate will be recalled (if it exists).

b. For fine adjustment of foam proportioning rate: press and hold either the **UP/DOWN** button. The rate will start to adjust up/down by 0.1% steps; release this button to stop the adjustment.

c. NOTE: a temporary preset at the current value will be added when the button is released. Presets can be changed, added or deleted by using **USER SETTINGS** from the main **MENU** button.

Select button

When the **BLUE** 'SELECT' button is **pushed**, it changes the data displayed on selectable display located on the bottom of display screen. The button allows operator to read out values for various system parameters as needed. Additionally, it will also allow operator to access "**Water Flow Simulation Mode**". The parameters listed below are selectable with this button can be customized to operator's need using USER SETTINGS from the **MENU** button.

List of Available Parameters that can be Selected:

- Foam Total Volume *
- Foam Flow System
- Foam Total Volume System
- Foam Tank Level [1]
- Foam Tank Time to Empty* [1]
- Foam Manifold Pressure
- Water Pressure [2]
- Water Flow *
- Water Total Volume*
- Water Total Volume System
- Water Simulated Flow **

NOTE 1: * enabled to be displayed by default

NOTE 2: ** always enabled

NOTE 3: [1] - for systems equipped with TankVision Foam Tank Gauge

NOTE 4: [2] - Fusion (MAX200 Model Only)

Fury Specifications

Foam/Water Discharge Control Specifications

The Foam Pro AccuMax II Fury foam system shall manage: pin-point foam concentrate injection, continuous monitoring of both water flow and foam flow, and communications to the hydraulic pump for speed and hydraulic fluid output. The foam/water discharge configuration shall include the following components:

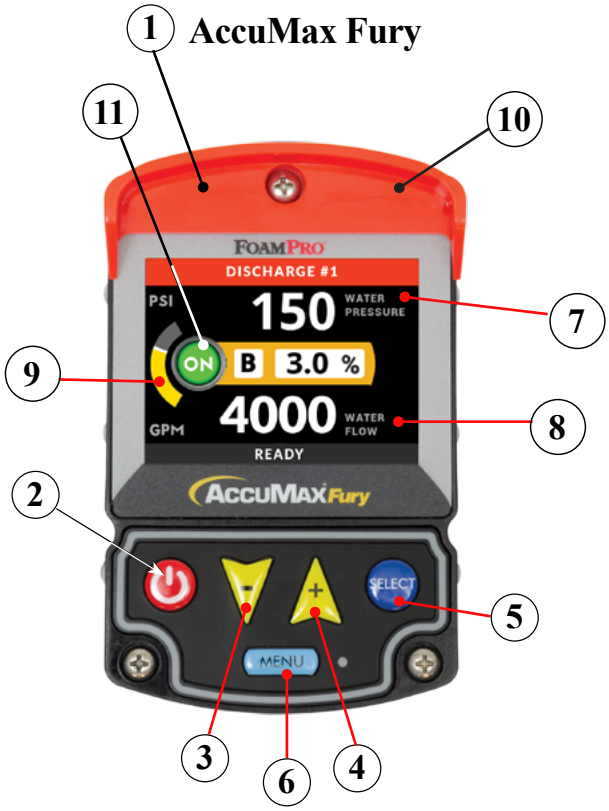

1. FURY Display
2. RED: Foam Delivery ON/OFF button
3. YELLOW: Down button (Adjust to lower preset foam %; press and hold)
4. YELLOW: Up button (Adjust to higher preset foam %; press and hold)
5. BLUE: Select button
6. LIGHT BLUE: Menu button
7. Water Pressure Indicator (PSI/BAR)
8. Water Flow Rate (GPM/LPM)
9. Foam Tank Level Indicator
10. Rain Guard (above display)
11. Foam System ON/OFF Indicator on Display

Fusion Specifications

Foam/Water Discharge and Electric Valve Controls Specifications

The Foam Pro AccuMax II Fusion foam system shall manage: pin-point foam concentrate injection, continuous monitoring of both water flow and foam flow, and communications to the hydraulic pump for speed and hydraulic fluid output.

1. FUSION Display
2. RED: Foam Delivery ON/OFF button
3. YELLOW: Down button (Adjust to lower preset foam %; press and hold)
4. YELLOW: Up button (Adjust to higher preset foam %; press and hold)
5. BLUE: Select button
6 YELLOW: Water Valve Preset button
7. RED: Water Valve Close button
8. GREEN: Water Valve Open button
9. LIGHT BLUE: Menu button
10. Water Pressure Indicator (PSI/BAR)
11. Water Flow Rate (GPM/LPM)
12. Tank Level Indicator
13. Rain Guard (above display)
14. Valve position indicator (bottom bar)
15. Foam System ON/OFF Indicator on Display

APEX Specifications

Electric Valve Control Specifications

When the Foam Pro AccuMax APEX displays are used with a Fusion multi-point foam system, they shall provide: pin-point foam concentrate injection, continuous monitoring of both water flow and foam flow, and communications to the hydraulic pump for speed and hydraulic fluid output. The water/foam discharge components shall have either: individual line injectors for "packaged' discharge assemblies" for a combination of water/foam discharges piped from separate water/foam manifold.

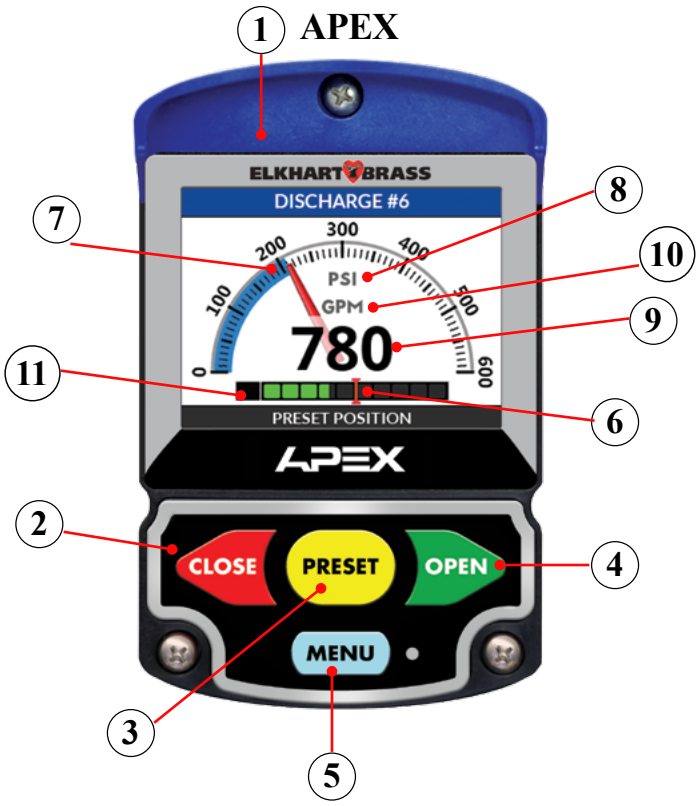

1. APEX Display
2. RED: Valve Close button
3. YELLOW: Valve Preset button
4. GREEN: Valve Open button
5. LIGHT BLUE: Menu button
6. Valve Preset Position Marker
7. Pressure Gauge Scale & Pointer
8. Pressure unit of measure (PSI or BAR)
9. Water Flow Rate (GPM or LPM)
10. Water Flow unit of measure (GPM or LPM)
11. Valve position indicator (red=CLOSED and black=OPEN)

6. FOAM SYSTEM AUXILIARY FUNCTIONS

Final Installer Mobile System: Mobile System Auxiliary Foam Functions

The foam system shall be supplied with "auxiliary function" components to provide several supplemental operations of the foam system. This equipment can be provided and installed by the assembler of the system and/or certain assemblies can be provided by Foam Pro as 'optional' equipment.

To assist the installer, the following section outlines:

1. OEM supplied and installed auxiliary foam functions
2. Foam Pro provided FOAM-AUX components and display system

"Simulation Mode": Operating Foam System for Auxiliary Functions

The operation of the "simulation mode" is outlined in the SET-UP and OPERATION section of this manual. Careful operator training and visible instructions must be in place for such operations. The "simulation mode" operation of a foam-line-injector is required for OEM auxiliary foam operation. 1.5"/40mm size (for up to 150GPM/560LPM flow) or 2"/50mm size for (300GPM/1125LPM flow) should be installed on FILs.

WARNING

- It is extremely important all operators are trained in the operation of the "simulation mode" of a foam-line-injector. A large instruction plaque shall be installed at the pump panel to denote the step-by-step set-up of this mode.
- When operating the FoamPro AccuMax System in the "Simulated Mode" function, an outlet for the foam concentrate must be provided. Otherwise, dangerous excessive pressure may be built up in the apparatus water piping and/or hoses. This outlet for the foam concentrate can be provided by turning the "CAL/INJECT" valve to the "CAL" position. A suitable container must be provided to collect the foam concentrate. Or, The foam concentrate discharge or foam tank refill line can be operated.

Final Installer Supplied: Auxiliary Foam Functions and Installation

The OEM supplied "Auxiliary Functions" could be as follows:

1. Valve and control of the foam tank-to-foam pump control valve (noted previously under INTAKE PLUMBING) (Specify Size: _____inches/_____mm)
2. External foam concentrate intake valve (known as OFF-BOARD). Refer to section #15 on this installation. (Specify Size: _____inches/_____mm)
3. Flushing of the foam system (Noted below)
4. (*) If specified, foam tank refill system (Specify Size: _____inches/_____mm)
5. (*) External foam concentrate discharge control. Refer to section #16 on this installation. (Specify Size: _____inches/_____mm)
6. Note: opening item #1 and #4 would allow the foam concentrate to be re-circulated.

Functions #4 and #5 (*) require special plumbing and installation of three-way valves to be installed AFTER the foam-line-injector (FLI) assembly. These three-way valves shall be the same size as the FLI and shall be separately controlled with an ON/OFF bypass switch and diverter control switch: foam tank refill or foam concentrate discharge (open outlet – without cap). Refer to the drawing on a typical installation arrangement.

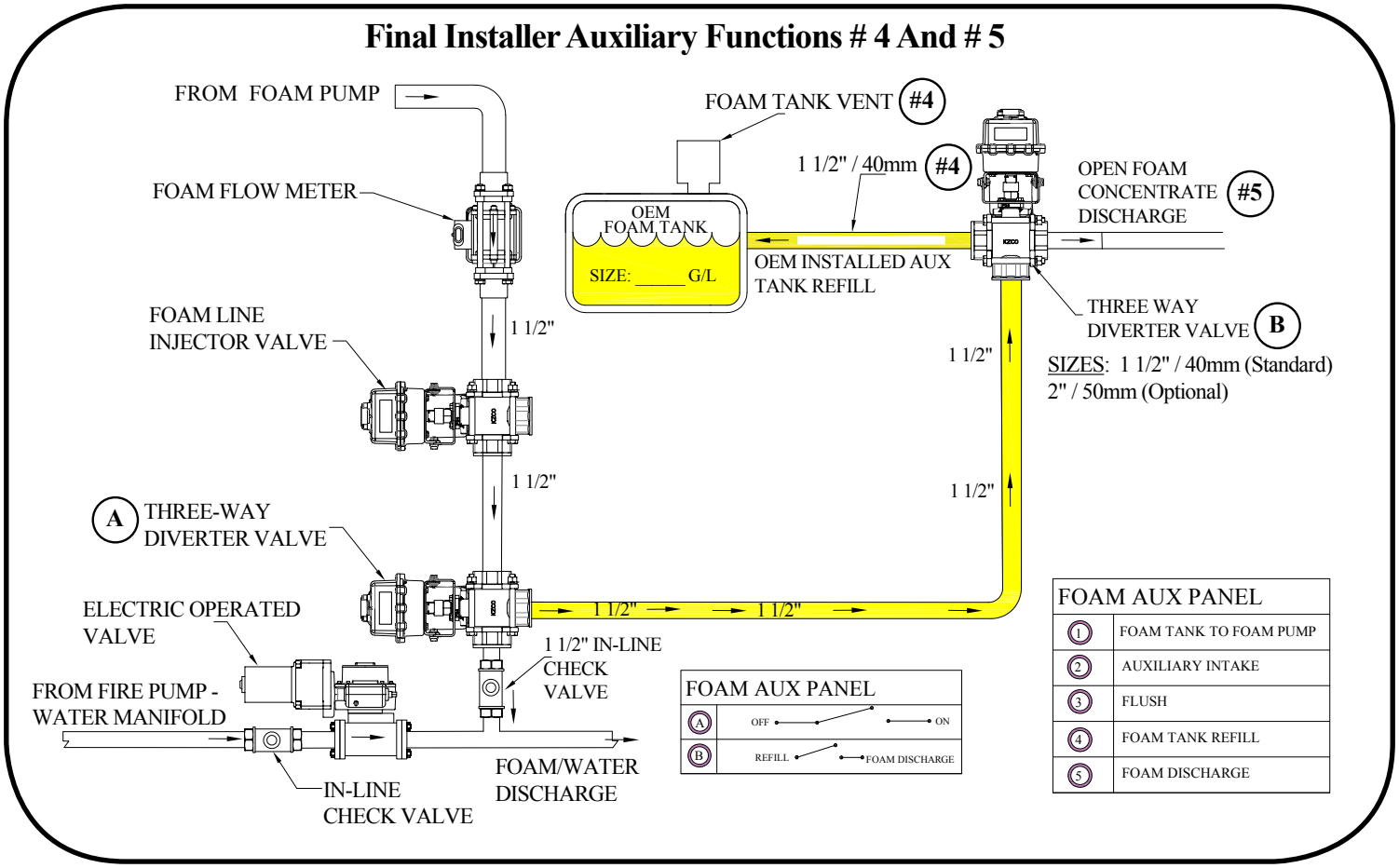

Auxiliary Foam Concentrate Intake Connection(s)

Every foam system shall be equipped with an auxiliary external foam concentrate connection intake. Such intakes are commonly referred to as "OFF-BOARD" pick-up intakes. The final installer shall be responsible for the auxiliary foam concentrate intake installation. Normally, this intake valve is located at or near the pump operator's position, so that the operator can easily see and control foam drafting or foam intake pressure.

The foam intake valve, plumbing, and adapters must be "sized" to the same size as the foam pump intake piping; supplied by the final installer. An optional FoamPro FOAM-AUX system and Elkhart electric valve are available.

If specified by the end-user, the final installer shall supply an "off-board" foam suction hose, of a minimum of 10 feet / 3 meters in length. If longer, the intake hose shall be increased in hose diameter by one size. The intake line and suction hose shall be the same size as the foam tank to foam pump line.

The end-user shall specify one of the following alternatives for an auxiliary foam intake valve(s):

a. **"Suction only" intake use:** from foam totes, portable foam tank, or foam tanker supply, without a pressure and the foam intake is for "suction only" purposes. A manual or electric gated ball valve sized to match the foam pump supply inlet shall be installed. The intake valve, intake hose fittings and adapters shall be supplied by the final installer.

⚠ WARNING

- The final installer shall install the following warning label next to the foam intake valve and connection: this applies only to FireLion and Edwards foam pumps.
- Foam concentrate intake is intended for "suction ONLY" purposes. This foam intake shall NOT be used for "flushing" foam system or pressurized foam supply.

b. "<u>Pressurized and Suction" intake use</u>: This is a dual-purpose intake, for both suction purposes and pressurized foam concentrate supply from foam pumpers or tankers with foam pumps. The final installer shall supply and install an auxiliary foam inlet with manual or electric gated ball valve on inlet plumbing to supply the foam pump from an external foam concentrate supply or pressurized source. This valve shall permit the pump operator to control the intake pressure. The intake hose fittings and adapters shall be supplied by the final installer.

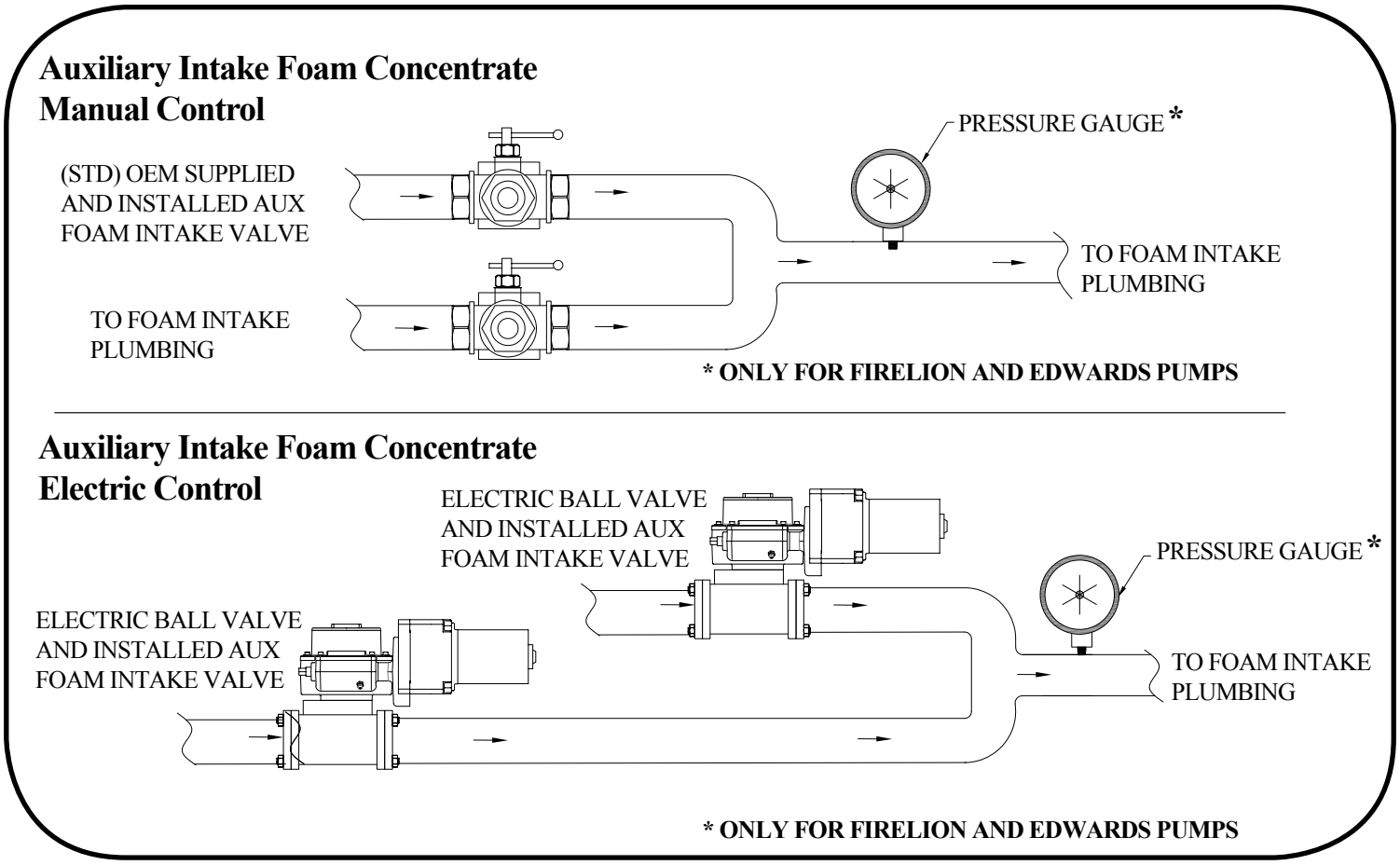

Foam Pro Supplied: FOAM-AUX Functions

OPTIONAL: EXTERNAL FOAM CONCENTRATE INTAKE(S)

Foam Pro supplied "off-board" foam supply valve(s): external "off-board" foam intake(s) shall be Elkhart Brass electric valve(s) with either an APEX control or FOAM-AUX display control. The intake hose fittings and adapters shall be supplied by the final installer.

These valves are available in two (2) alternative methods:

a. Elkhart APEX Valve Control: foam concentrate intake electric valve shall be controlled by an APEX valve display.

b. <u>FoamPro FOAM-AUX display control:</u> A Foam Pro supplied FOAM-AUX auxiliary function system and display shall be installed by the final installer. The FOAM-AUX shall control an Elkhart electric intake valve(s).

The FOAM-AUX system shall provide the following functions:

1. Foam tank-to-foam pump valve control ON/OFF (Specify size: ___"/mm)
2. External foam concentrate valve(s) control (Specify size: ___"/mm)
   a. Manually controlled valve(s) supplied and installed by final installer
   b. Elkhart electrically controlled foam concentrate intake valve(s) supplied by Foam Pro and installed by final installer.
   c. Flush system control (manual valve or electric valve) supplied and installed by final installer.

d. Foam tank refilling (Specify size: ___”/mm)

e. Foam concentrate discharge (Specify size: ___”/mm)

f. Foam concentrate recirculation

Refer to drawing on the installation of the FOAM-AUX plumbing diagrams. The setup and operation of the system is noted under the SETUP section of this installation manual.

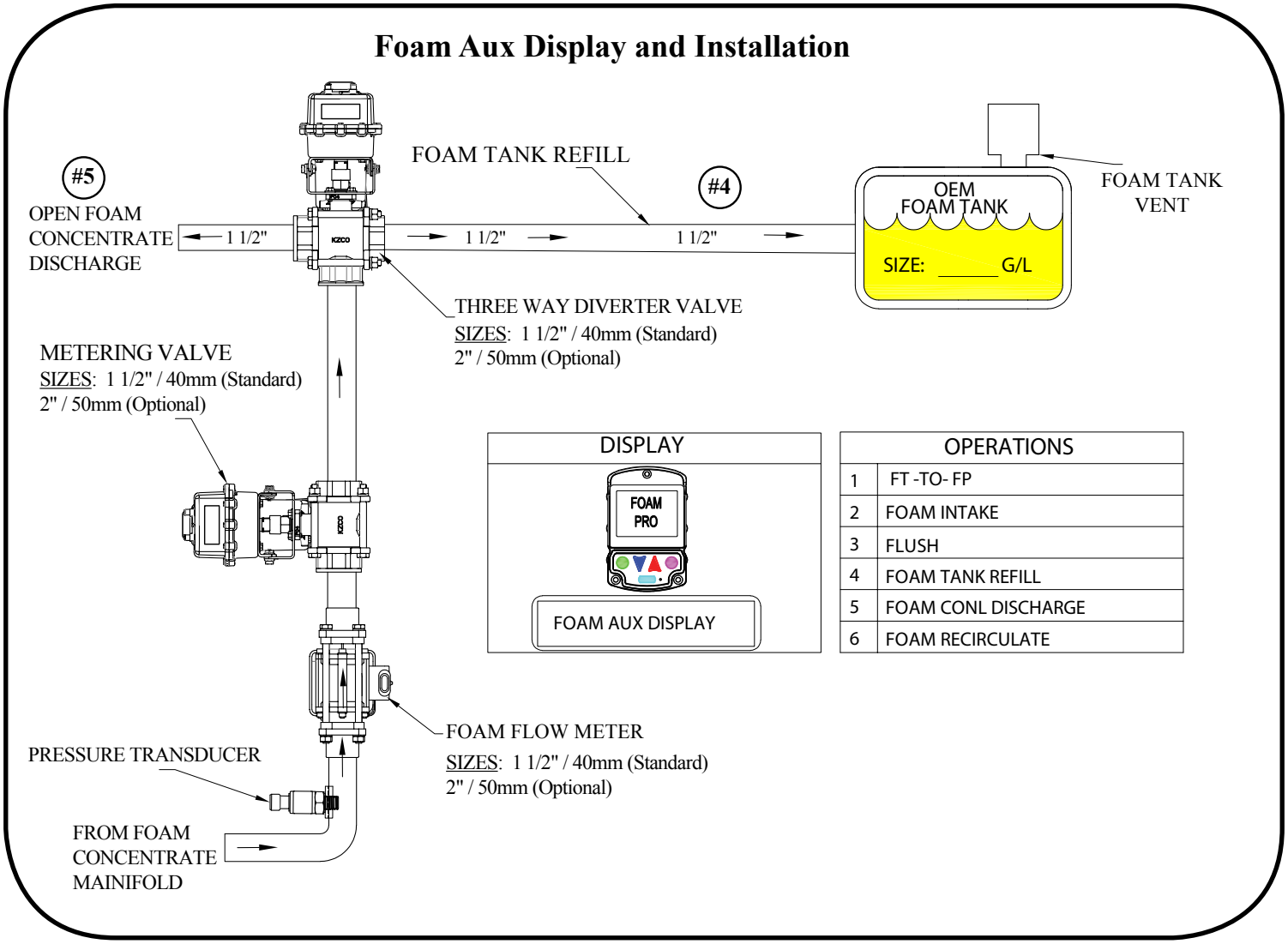

WARNING

On FireLion and Edwards foam pumps a pressure gauge shall be installed next to the intake valve. The final installer shall install the following warning label next to the foam intake valve and connection:

- **WARNING:** foam intake valve (from either “suction” or “pressurized” foam supply) shall be ball valve controlled to allow a **maximum pressure of no more than 50 PSI (3 BAR)** or foam pump damage will result. The foam intake shall NOT be used for “flushing” purposes.

7. OPERATION OF SYSTEM

Screen Overview

On power-up the display module will be in the normal operating mode. The red ON/OFF button, yellow decrease (-)/ increase (+) buttons and blue SELECT button are used to control the foam system operation. For the MAX200 Fusion model, the green OPEN, red CLOSE, and yellow PRESET buttons will control the water valve position. The yellow PRESET button will set the valve to a programmed position. The blue MENU button switches to the Menu Screen. (*Menu Screen is activated when this button is pressed and held down for two seconds.*)

Foam system state and operating parameters will be shown on the display screen along with system messages, warnings and error codes.

Operator Screen

The operator screen loads upon the initial start-up. All information needed to operate the system is shown on this screen.

- Foam on/off indicator
- Foam class indicator
- Foam proportioning rate (%)
- Fixed operational parameter shown at the top of the screen
- Toggle through Parameter display (changeable with select button)
- Foam tank level indicator (if equipped), system messages
- Warnings and error/fault messages
- User-assigned identification: name and color codes.
- **NOTE: MAX200 Fusion models feature a valve position.**

Button Operations

- Red ON/OFF button: Press and hold for 2 seconds to start/stop the foam proportioning.
- Yellow Decrease button (-): Press to switch to the foam percentage to a lower preset. Press and hold to make a temporary adjustment to the foam percentage in 0.1% increments.
- Yellow Increase button (-): Press to switch to the foam percentage to a higher preset. Press and hold to make a temporary adjustment to the foam percentage in 0.1% increments.

For MAX200 Fusion only:

- Green OPEN button: Press and hold to drive a valve toward the Open position. Valve will stop when the button is released, or when it is fully open.
- Red CLOSE button: Press and hold to drive a valve toward the Closed position. Valve will stop when the button is released, or when it is fully closed.
- Yellow PRESET button: Press and hold once; upon release the valve will travel to a preprogrammed position and stop there. Press and hold PRESET button for three seconds to save the current valve position as a preset position. This will be saved into the valve actuator's internal memory.

Menu Button Operations

The Menu is accessed by pressing and holding the MENU button. The menu system allows for the following functions:

- Parameter value adjustment & modification of options
- Display adjustments
- Diagnostics
- System Backup
- System Maintenance and Calibration
- Save and retrieve settings from external USB memory
- Review active error, warning, faults and recorded events
- Firmware Updates

Screen View

Operator Screen Elements

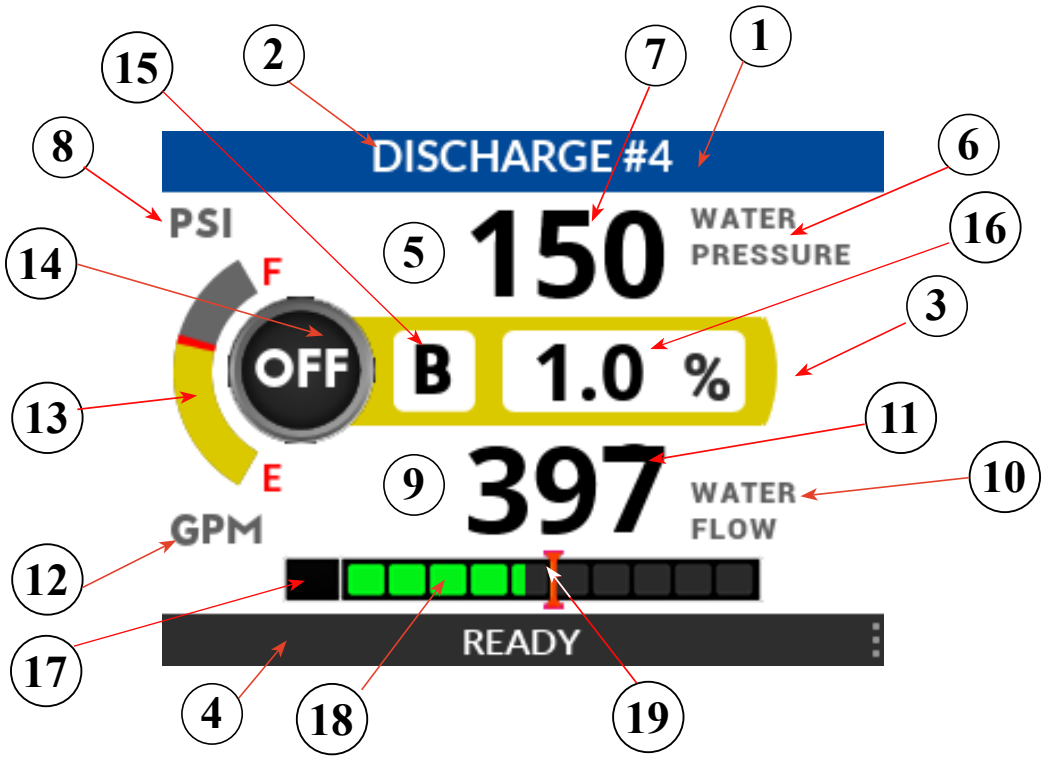

- 1. Header bar – color coded
- 2. Discharge name – user defined
- 3. Error / Warning indicator (displayed only when warning/error exists)
- 4. Message bar
- 5. Fixed Display
- 6. Fixed Display Variable ID Label
- 7. Fixed Display Value
- 8. Fixed Display Unit of Measure
- 9. Selectable Display
- 10. Selectable Display Variable ID Label
- 11. Selectable Display Value
- 12. Selectable Display Unit of Measure
- 13. Foam Tank Level Indicator
- 14. Foam Delivery ON/OFF Indicator
- 15. Foam Class Indicator
- 16. Current Foam Proportioning Rate
- 17. Water Valve Closed Indicator (AccuMax Fusion Only)
- 18. Water Valve Position Indicator (AccuMax Fusion Only)
- 19. Water Valve Preset Indicator (AccuMax Fusion Only)

Menu Screen Layout of Components (Diagram is shown on the next page.)

- **A—Header Bar**: Current Menu/Sub menu title and icon are displayed.
- **B—Content Area**: Displayed as a list of menu items/options. Each menu item is shown with a title, icon to the left and the current value (or status). Position bar on the right side of the display screen shows the position of the selected menu item.
- **C—Footer Bar**: The Footer Bar is located at the bottom of the LCD display screen and shows icons that represent the keypad buttons. Each button icon is accompanied by a function indicator. This indicator will show the action that is associated with this button. The button action will change depending on the selected item or menu screen.

Menu Home Screen

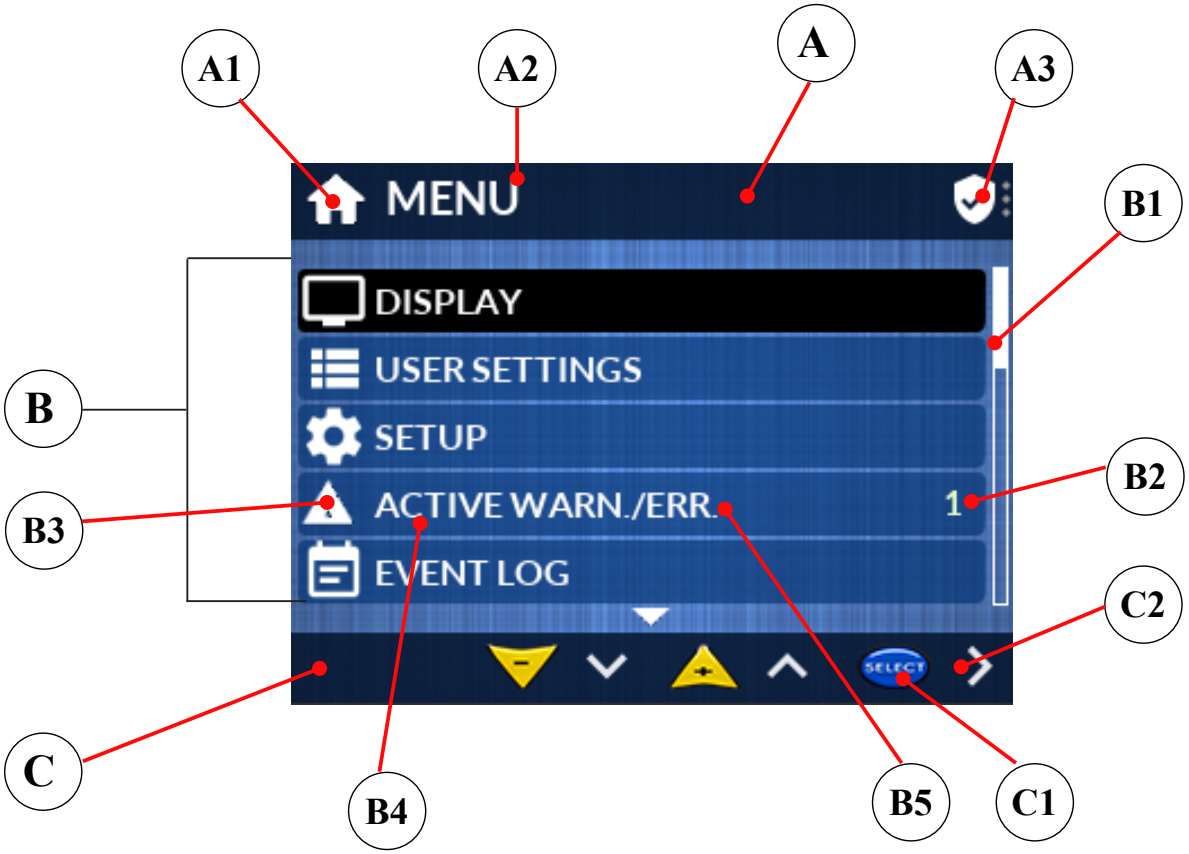

- A. **Header bar**
- A1. Submenu Icon
- A2. Submenu Title
- A3. Admin. Access Indicator
- B. **Content Area**
- B1. Position Bar
- B2. Menu Item Value (if applicable)
- B3. Menu Item Icon
- B4. Menu Item Title
- B5. Menu Item
- C. **Footer Bar**
- C1. Button Icon
- C2. Button Action Indicator

Button Functioning in Menu Screens

While navigating through any of the menu screens, the keypad buttons (below the LCD display) are used to navigate, select menu items, adjust values, save and cancel changes/menu selections.

Typical Button Functions:

- ON/OFF button (Red)
    - Return to previous menu [←]
    - Cancel changes or action (menu selection) [**X**]
    - Decrease numerical value [—]
    - Go back to previous alphabetical letter (text/numeric entry field) [**ZA**]
- DECREASE (-) button (Yellow)
    - Select next item on list
    - Select next editable element on screen
    - Move to next position in text entry field
- INCREASE (+) button (Yellow)
    - Select previous item on list
    - Select previous editable element on screen
    - Move to previous position in text entry field
- SELECT button (Blue)
    - Enter sub-menu [→]
    - Increase numerical value [+]
    - Switch to next letter in alphabet (for text or numeric entry field) [**AZ**]
    - Save and Return (checkmark) [✓]
- MENU button (Blue) has only one function.
- When pressed it switches back to operator screen, regardless of currently displayed menu content. All committed and saved changes are applied. Normal operation is resumed.

Menu Functions Outline

DISPLAY

- **DISPLAY BRIGHTNESS:**
- Brightness Day
- Brightness Night
- **DAY/NIGHT MODE**
- Auto Local
- Auto Remote
- Auto Master
- Day Only
- Night Only
- **D/N THRESHOLD (Adjust #)**
- **SCREEN THEME**
- Fury Default
- Fury No Tank Ind.
- Fusion Default*
- Fusion No Tank Ind.*

USER SETTINGS

- RESET TOTALS
- FOAM PRESETS
- Preset 1
- Preset 2
- ...
- Add Preset
- **FIXED DISPLAY**
- Foam Flow.
- Foam Total
- Foam Flow System
- Foam Total System
- Foam Tank Level
- Foam Time to Empty
- Foam Pressure Sys
- Water Pressure*
- Water Flow
- Water Total
- Water Total System
- **SELECTABLE DISPLAY**
- Select Variables
- Foam Flow.
- Foam Total
- Foam Flow System
- Foam Total System
- Foam Tank Level
- Foam Time to Empty
- Foam Pressure Sys
- Water Pressure*
- Water Flow
- Water Total
- DEFAULT DISPLAY
- Foam Flow.
- Foam Total
- Foam Flow System
- Foam Total System
- Foam Tank Level
- Foam Time to Empty
- Foam Pressure Sys
- Water Pressure*
- Water Flow
- Water Total
- DEFAULT TIMEOUT
- Never
- 5 Seconds
- 10 Seconds
- 30 Seconds
- ...
- DEF. DIM. WATER FLOW
- SIM. WT. FLOW INC.
- SIM. WT. FLOW M. INC.
- DEF. FOAM FLOW

- FOAM FLOW INC.
- FOAM FLOW M. INC.
- NAME:
- Edit Name
- Select from List
- Import Name List
- COLOR CODE:
- Red, Orange, Green ...
- UNITS SYSTEM
- US-PSI,GPM
- US-PSI, ft3/M
- METRIC-kPa, LPM
- METRIC-BAR, LPM
- METRIC-kPa, LPs
- METRIC-BAR, LPs
- METRIC-kPa, m3/H
- METRIC-BAR, m3/H
- SET DATE/TIME
- DATE FORMAT
- Year/Month/day
- Month/Day/Year
- Day/Month/Year
- TIME FORMAT
- 12 Hours
- 24 Hours

SETUP

- UNIT ID
- GROUP ID
- PAIR VALVE*
- PAIR INJECTOR
- PAIR HYD.CNTL.
- PAIR LOW-FLOW
- FOAM CLASS
- Class A
- Class B
- FOAM PUMP TYPE
- FIRE LION 3020
- FIRE LION 3040
- FIRE LION 3060
- FIRE LION 3090
- FIRE LION 3150
- FIRE LION 3300
- TRIDENT 3020
- TRIDENT 3040
- TRIDENT 3060
- TRIDENT 3090
- TRIDENT 3150
- TRIDENT 3300
- EDWARDS 3020
- EDWARDS 3040
- EDWARDS 3060
- EDWARDS 3090
- EDWARDS 3150
- EDWARDS 3300
- NO FOAM SHUTDOWN
- 5 Sec.
- 15 Sec.
- 30 Sec. (Default)
- ...
- FOAM TANK SIZE**
- TANK GAUGE ADDR.**
- 202 Foam B
- 201 Foam A
- 200
- WT. FL. SENS LOC.
- Water
- Solution

- WT. FLOW SOURCE ID
- Local
- Dev. ID:1
- Dev. ID:2
- ...
- HYD. CNTL BACKUP
- Installed
- Not Installed
- VALVE POLARITY:*
- Normal- Type T1
- Reverse- Type T2
- FLOW CUT-OFF (Adjust #)
- FLOW INCREMENT (Adjust #)
- PRESS INCREMENT (Adjust #)
- MSG. RATE
- LOAD CONFIG.
- EXPORT CONFIG.
- SAVE FILE
- CHANGE FILE NAME

ACTIVE WARN./ERR.

EVENT LOG

- CURRENT LOG
- OPEN PREVIOUS LOG
- LOG FILES LIMIT (Adjust #)
- EXPORT ALL LOGS
- CLEAR ALL LOGS

MAINTENANCE

- VALVE CALIBRATION*
- PRESS. CALIBRATION*
- WATER FL. CAL. INJ.
- FOAM CAL. MASTER
- FOAM CAL. INJ.
- FOAM CAL L-FLOW.

DIAGNOSTICS

- IDENTIFY:
- DIAG. SCREEN
- FIRMWARE REV.
- HARDWARE
- RESTART UNIT

ACCESS

- ENTER CODE (Adjust #)
- LOGOUT

FACTORY

- DEMO MODE
- PRODUCT
- MODEL
- (INSERT #)
- (INSERT #)
- FIRMWARE UPDATE
- Update Remote Device
- FACTORY RESET

***NOTE: MAX 200 Fusion Model Only**

****NOTE: System Equipped with TankVision Pro**

Accessing Water Flow Simulation Mode

Press the blue SELECT button several times until "**Simulated Water Flow**" is displayed on selectable display at the bottom of the screen. The value on the display will read "**OFF**". To activate water flow simulation, press and hold the yellow **UP/DOWN** buttons simultaneously. When activated, this value will change to a number and start to flash. The number shown on the display is the simulated water flow rate for –this discharge.

"**Simulated Water Flow**" can be adjusted by using the yellow **UP/DOWN** buttons. To change the foam proportioning rate during water simulation mode, press the blue **SELECT** button once. The water flow rate will stop flashing and the foam proportioning rate setting will start to flash. Adjust the foam proportioning rate in the normal manner by using the yellow **UP/DOWN** buttons.

Press the blue SELECT button at any time to switch between "**Simulated Water Flow**" and "**Foam Proportioning Rate**" to make adjustments to them.

To Cancel "**Simulated Water Flow**" mode, **press and hold the UP/DOWN buttons simultaneously** until the value is turned "OFF" on the display.

CAUTION

- When operating the FoamPro AccuMax System in the “Simulated Mode” function, an outlet for the foam concentrate must be provided. Otherwise, dangerous excessive pressure may build up in the apparatus water piping and/or hoses. This outlet for the foam concentrate can be provided by turning the “CAL/INJECT” valve to the “CAL” position. A suitable container must be provided to collect the foam concentrate.

8. SETUP

Setup Guidelines

Initial Setup

The AccuMax foam proportioning system must be properly setup before any operations can take place. AccuMax setup is conducted using Display Modules for either Fury (MAX100) or Fusion (MAX200) models. All settings and options can be set from within the Menu system.

All systems are built and sold by FoamPro are factory preconfigured to be functional and tested. Installer must verify system setup after installation. Setup is also needed if hardware configuration is changed or main components are replaced. Some settings required by the system cannot be set at the factory and must be entered by the installer.

NOTE: Some settings in setup are protected from unintentional change. In order to gain access to these settings please log in with access code as described in: User Access Level.

Tasks Accomplished During Configuration:

- Set identifiers to all devices that are parts of the system
- Associate display modules with corresponding injectors/valves to be controlled
- Set values of operating parameters for the system
- Enable / disable system features based on hardware configuration
- Set user parameters to suit operator's preference

NOTE: Setup must be followed by system calibration (see Maintenance / Calibration).

AccuMax Setup Guidelines

The following table outlines the order and steps for the typical AccuMax system setup process. Additional steps may be required for more complex installations. The system could be further customized to suit the operator's preference with the 'USER SETTINGS' menu.

NOTE: Before proceeding with setup make sure that all electrical connections were made, CAN network terminating resistors were installed and all devices receive electrical power.

Table 1. AccuMax System Setup Process

	Step	Device	Description	Menu Item
1	Set system unit of measure	All Display Modules	Set preferred system unit of measure.	USER SETTINGS / UNIT SYSTEM
2	Set Display Module Unit ID	All Display Modules	Set unique unit ID to each display module on the network. Unit ID is used to identify and pair devices that work with specific discharge/injection point of AccuMax system. Redundant display modules should be set with the same Unit ID as display module they should be redundant to.	SETUP/ UNIT ID
3	Setting Group ID	All Display Modules	Set at factory as 0 - default. Change ONLY if there are more than one AccuMax system on the same CAN network. Group ID is used to group AccuMax components into separate systems that will function independent of each other.	SETUP / GROUP ID
4	Pair Injector	All Display Modules	In this process, specific Injector assembly is selected from list of all available on network by its S/N. This Injector is assigned Unit ID that matches Unit ID of Display Module used for pairing process. Once complete, Display Module and Injector will have same Unit ID and they will become a functional pair. Pairing for redundant displays modules is not required.	SETUP / PAIR INJECTOR
5	Pair Hydraulic Controller	Once using any Display Module	Hydraulic Controller are set to Group 0 at the factory. In this process Group ID is assigned to Hydraulic Controller. Change ONLY if there are more than one AccuMax system on the same CAN network, or if hydraulic controller is set to wrong Group ID.	SETUP / PAIR HYDRAULIC CONTROLLER
6	Pair Low-Flow	Once using any Display Module	Low-Flow Assembly is set to Group 0 at the factory. In this process Group ID is assigned to Low-Flow. Change ONLY if there are more than one AccuMax system on the same CAN network, or if Low-Flow is set to wrong Group ID.	SETUP / PAIR LOW-FLOW
7	Pair Valve (for MAX200 Fusion models only)	All Display Modules	In this process specific Water Valve is selected from list of all available on network by its' S/N. This Valve is assigned Unit ID that matches Unit ID of Display Module used for pairing process. Once complete Display Module and Valve will have same Unit ID and they become functional pair. Pairing for redundant displays modules is not required.	SETUP / PAIR VALVE
8	Water Flow Sensor Location	All Display Modules	Set water flow sensor location that matches its installation location: in water or in solution.	SETUP / FLOW SENS. LOC.
9	Set Foam Class	All Display Modules	Set at factory to Class B. Changes Foam Class indicator on display.	SETUP / FOAM CLASS
10	Foam Pump Type	Once using any Display Module	Set at factory to foam pump type shipped with the system. Change ONLY if setting does not match with hardware.	SETUP / FOAM PUMP TYPE
11	Foam Tank Size	Once using any Display Module	For systems equipped with Tankvision Pro. Set foam tank capacity used to supply AccuMax system.	SETUP / FOAM TANK TYPE
12	Tankvision Pro Address	Once using any Display Module	For systems equipped with Tankvision Pro. Set Tankvision Pro address that identifies which foam type tank is used by AccuMax	SETUP / FOAM GAUGE ADDR.
13	Set Date / Time	Once using any Display Module	Set date and time.	USER SETTINGS / SET DATE/TIME

User Access Level

To prevent unintentional parameter changes, a number of settings are only available to users with advanced access permissions. In order to gain access to these settings, an operator needs to enter their access code. **NOTE: the shield icon indicates that this parameter requires an advanced user access level.**

Advanced User Access Code:

1. Select ACCESS item in the main menu. Press the SELECT button to access the submenu.
2. Select 'ENTER CODE' item in the submenu. Press the SELECT button to open the code entry screen.
3. If the code is selected, use the SELECT button to increase the digit at the cursor position. Use ON/OFF button to decrease the digit at the cursor position. Use the INCREASE or DECREASE button to move the cursor to the next position. **Entered code is 3211**.
4. After the code has been entered, press the INCREASE or DECREASE button until the cursor reaches the end of the code field. The next press of the INCREASE or DECREASE button will select 'CLEAR' item in this screen. Or, press and hold the INCREASE or DECREASE button to until the 'CLEAR' item is selected.
5. Press the INCREASE or DECREASE button and select 'SAVE AND RETURN' item. Press the SELECT button to confirm code entry, and the display will revert back to the main menu screen. If code entry is successful, an icon with a shield and checkmark will be displayed in the upper right corner, which indicates the advanced user permissions have been granted.

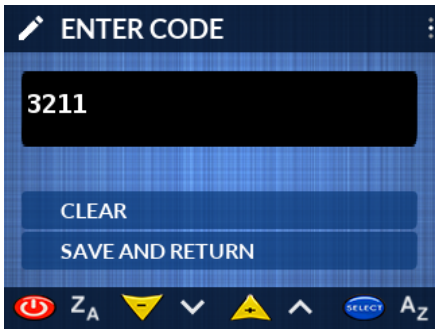

Advanced User Logout:

To remove advanced user permissions, it is recommended to logout or cycle the power to the unit.

1. Select ACCESS item in the main menu. Press the SELECT button to access the submenu.
2. Select 'LOGOUT' item in the submenu. Press the SELECT button to logout.

Setting Module Unit ID

The display module unit ID setting determines which foam injector and/or valve will be controlled by that display. Setting the module ID should only be done when a new unit is installed, or after a unit is replaced. A secondary display module can be added to operate the same foam injector and/or valve by assigning the same unit ID as the first module.

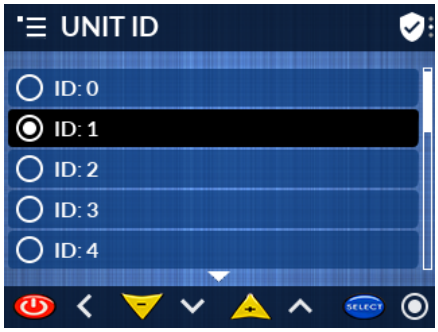

1. Select SETUP on the menu screen by pressing the INCREASE or DECREASE button. Press the SELECT button to access this menu.
2. Select Unit ID item by pressing the INCREASE or DECREASE button to access this menu.
3. Select a unit ID from the list in the Unit ID submenu with INCREASE or DECREASE button. Press the SELECT button to accept the selection.
4. When the warning message is shown on the display, confirm your selection by pressing the SELECT button. Or, press the ON/OFF button to cancel this action and the display will revert back to the main menu screen.
5. ***Setting the module Unit ID must be followed by pairing the AccuMax system hardware (for secondary display, pairing is not required)***.

Setting Module Group ID

Group ID setting identifies AccuMax system hardware components that belong to one foam system on the CAN network. When more than one AccuMax foam system is connected on the same CAN network, each should be assigned with a different group ID number. All components of each system should be set with the corresponding Group ID. If there's only one AccuMax foam system on the CAN network, the Group ID can be left at the default setting.

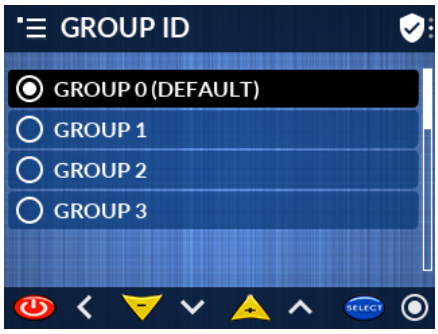

1. Select SETUP on the menu screen by pressing the INCREASE or DECREASE button. Press the SELECT button to access this menu.
2. Select Group ID item by pressing the INCREASE or DECREASE button to access this menu.
3. Select a group ID number from the list in the group ID submenu with INCREASE or DECREASE button. Press the SELECT button to accept the selection. To return to the previous menu, press the ON/OFF button.
4. ***Setting the module Group ID must be followed by pairing the hydraulic controller and low flow injector (for secondary display, pairing is not required)***.

Pair Injector

NOTE: *Display modules and injectors are normally factory paired. However, pairing can be changed at any time, if there is a configuration change, or for replacement parts.* Pairing process determines injector association with the display module. In this process, the injector will be assigned an ID number that matches the ID number of the display module. Once complete, the display module will be able to control the injector.

1. Select SETUP on the menu screen by pressing the INCREASE or DECREASE button. Press the SELECT button to access this menu.
2. Enter the Pair Injector submenu. (The INCREASE or DECREASE button is used to select this menu, and press the SELECT button to access this menu.)

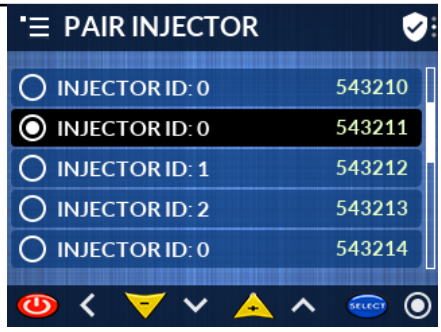

3. A list of all injectors on the CAN network will be displayed with their serial numbers and current IDs. If the menu displays 'NO ITEMS', there are no injectors on the network that can be paired.
4. Select the injector Serial Number to be paired with the display module. Any injector can be selected during the pairing process. For injectors with IDs other than 0, ensure that another display module has not already been paired with this injector. Pairing will change the injector ID to match ID of the display module. The previous pairing will be overridden.
5. To choose the injector to be paired by use the INCREASE or DECREASE button. Press the SELECT button to confirm the selection.

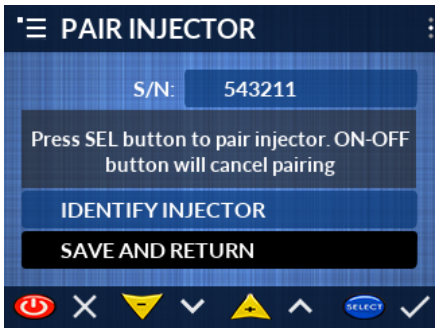

6. Pairing screen will be displayed and 'IDENTIFY INJECTOR' item will be selected. Press the SELECT button to turn on the blue light on the selected injector; press the ON/OFF button to shut off the light. This can be used to confirm the selected injector is the intended one.
7. To proceed with pairing, press INCREASE or DECREASE button once to select 'SAVE AND RETURN' item. Press the SELECT button to save the pairing and return to the injector selection menu, or press ON/OFF button to cancel the pairing and return to the injector selection menu.
8. In the injector list, the paired injector will be selected and its ID will match the ID of the display module. Pairing is now complete.

Pair Hydraulic Controller

NOTE: *Hydraulic controllers are normally factory paired. However, pairing can be changed at any time, if there is a configuration change, or for replacement parts.* Pairing process assigns the hydraulic controller with a group number. Group ID needs to be changed only if there is more than one AccuMax system on the same CAN Network. The hydraulic controller group ID must match AccuMax system group ID that it is intended to work with.

1. Select SETUP on the menu screen by pressing the INCREASE or DECREASE button. Press the SELECT button to access this menu.
2. Enter the Pair HYD. CNTL. submenu. (The INCREASE or DECREASE button is used to select this menu, and press the SELECT button to access this menu.)

3. A list of all hydraulic controllers will be displayed with their serial numbers and current group number. If the menu displays 'NO ITEMS', there are no hydraulic controllers on the network.
4. To choose the hydraulic controller to be paired by use the INCREASE or DECREASE button. Press the SELECT button to confirm the selection.
5. Pairing screen will be displayed and 'IDENTIFY HYDRAULIC CONTROLLER' item will be selected. This feature is not available for hydraulic controllers.

6. Press INCREASE or DECREASE button to select 'SAVE AND RETURN' item. Press the SELECT button to save the pairing and return to the hydraulic controller selection menu, or press ON/OFF button to cancel the pairing and return to the hydraulic controller selection menu.
7. The hydraulic controller list will reflect the changes made. Pairing is now complete.

Pair Low-Flow

NOTE: *Hydraulic controllers are normally factory paired. However, pairing can be changed at any time, if there is a configuration change, or for replacement parts.* Pairing process assigns the low-flow line with a group number. Group ID needs to be changed only if there is more than one AccuMax system on the same CAN Network. The low-flow line group ID must match AccuMax system group ID that it is intended to work with.

1. Select SETUP on the menu screen by pressing the INCREASE or DECREASE button. Press the SELECT button to access this menu.
2. Enter the Pair Low-Flow submenu. (The INCREASE or DECREASE button is used to select this menu, and press the SELECT button to access this menu.)

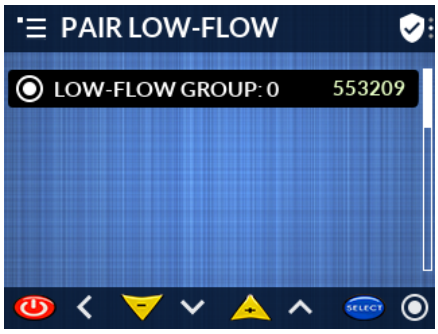

3. A list of all Low-Flow Line on the CAN network will be displayed with their serial numbers and current group ID. If the menu displays 'NO ITEMS', there are no Low-Flow Line on the network.
4. To choose the Low-Flow Line to be paired by use the INCREASE or DECREASE button. Press the SELECT button to confirm the selection.
5. Pairing screen will be displayed and 'IDENTIFY LOW FLOW' item will be selected. Press the SELECT button to turn on the blue light on the selected low-flow line; press the ON/OFF button to shut off the light. This can be used to confirm the selected low-flow line is the intended one.

6. To proceed with pairing, press INCREASE or DECREASE button to select the 'SAVE AND RETURN' item. Press the SELECT button to save the pairing and return to the low-flow line selection menu, or press ON/OFF button to cancel the pairing and return to the low-flow line selection menu.
7. The low-flow line list will reflect the changes made. Pairing is now complete.

Pair Valve (for MAX200 Fusion models only)

Pairing process determines valve association with the display module. In this process, the valve will be assigned an ID number that matches the ID number of the controller. Once complete, display module will be able to operate the paired valve.

1. Select SETUP on the menu screen by pressing the INCREASE or DECREASE button. Press the SELECT button to access this menu.
2. Enter the Pair Valve submenu. (The INCREASE or DECREASE button is used to select this menu, and press the SELECT button to access this menu.)

3. A list of all valves on the CAN network will be displayed with their serial numbers and current IDs. If the menu displays 'NO ITEMS', there are no valves on the network that can be paired.
4. Select the valve Serial Number to be paired with the control module. Any valve can be selected during the pairing process. For valves with IDs other than 0, ensure that another control module has not already been paired with this valve. Pairing will change this ID to the current control module ID. The previous pairing will be overridden.

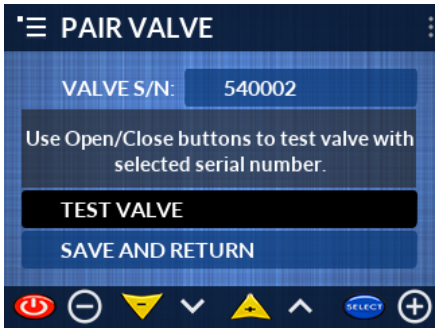

5. Choose the valve to be paired by selecting this valve using the INCREASE or DECREASE button. Press the SELECT button to confirm the selection.

6. Pairing screen will be displayed and 'TEST VALVE' item will be selected. If needed, press the SELECT or ON/OFF button to move the valve. This will confirm that the valve chosen is the correct one.
7. To proceed with pairing, press INCREASE or DECREASE button once to select 'SAVE AND RETURN' item. Press the SELECT button to save the pairing and return to the valve selection menu, or press ON/OFF button to cancel the pairing and return to the valve selection menu.
8. In the valve list, the paired valve will be selected and its ID will match the ID of the display module. Pairing is now complete.

Foam Class

The Foam Class setting determines the class indicated on the display. It will be either Class A or Class B.

1. Select SETUP item in the main menu. Press the SELECT button to access this menu.
2. Select 'FOAM CLASS' item. Enter this submenu using the SELECT button.
3. The display will show Foam Class choices. To change the Foam Class, press INCREASE or DECREASE button to select the desired foam class.
4. Press the SELECT button to apply the change. To return to the previous menu, press the ON/OFF button.

Foam Pump Type

NOTE: *Foam Pump Type is normally set at the factory. However, it can be changed at any time, if there is a configuration change, or for replacement parts.* The Foam Pump Type setting determines the pump brand and capacity used on the AccuMax system.

1. Select SETUP item in the main menu. Press the SELECT button to access this menu.
2. Select 'FOAM PUMP TYPE' item. Enter this submenu using the SELECT button.
3. The display will show all foam pump choices. To change the foam pump type, press INCREASE or DECREASE button to select the desired foam pump type.
4. Press the SELECT button to apply the change. To return to the previous menu, press the ON/OFF button.

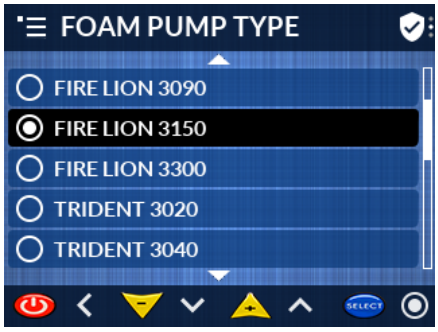

No Foam Shutdown Delay

The No Foam Shutdown Delay setting determines the amount of time the foam pump will run after the system runs out of foam. After this time delay, the foam pump will shut down. NOTE: For the duration of this delay, a "NO FOAM" warning will be displayed.

1. Select SETUP item in the main menu. Press the SELECT button to access this menu.
2. Select 'NO FOAM SHUTDOWN ' item. Enter this submenu using the SELECT button.
3. The display will show a list of the time duration options. To change the No Foam Shutdown delay, press INCREASE or DECREASE button.
4. Press the SELECT button to apply the change. To return to the previous menu, press the ON/OFF button.

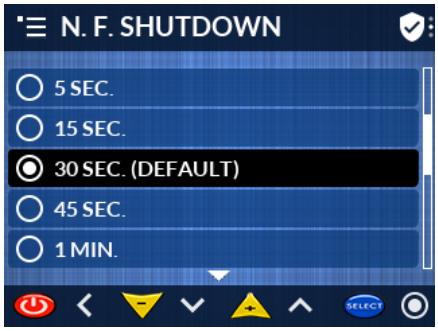

Foam Tank Size

This setting defines the foam tank capacity. This number is used to calculate the amount of time until the tank is depleted at the current consumption rate. The "Foam Time to Empty" value can be selected as one parameter to be displayed on the operator's screen. Confirm the selected unit of measure (UOM) is the correct one. To change the UOM, see USER SETTINGS , UNITS SYSTEM menu. **NOTE:** *This setting is only used when the TankVision Pro is installed along with the AccuMax system*.

1. Select SETUP on the menu screen by pressing the INCREASE or DECREASE button. Press the SELECT button to access this menu.
2. In SETUP, select the 'FOAM TANK SIZE' item using the INCREASE or DECREASE button. Press the SELECT button to enter the setting screen.
3. The display will show the current foam tank capacity selected. To change the value, use the SELECT button to increase, and the ON/OFF button to decrease the value. To increment/decrement capacity automatically, press and hold the either button.
4. To save the new value, press the INCREASE or DECREASE button until 'SAVE AND RETURN' item is selected. Press the SELECT button to save the new value, and return to the previous menu. Or, press the ON/OFF button to cancel the change.

TankVision Gauge Address Number

The setting selects the TankVision unit that matches the foam type used by AccuMax foam system. The TankVision unit types are identified by the address number (201-Foam A, 202-Foam B, 200-Other)

1. Select SETUP item in the main menu. Press the SELECT button to access this menu.
2. Select the 'TANK GAUGE ADDR.' item. Enter this submenu using the SELECT button.
3. The display will show Foam Tank Class options. To change the selection, press INCREASE or DECREASE button.
4. Press the SELECT button to apply the change. To return to the previous menu, press the ON/OFF button.

Water Flow Sensor Location

This setting indicates if the water sensor is installed before the foam concentrate injection point (WATER), or after the injection point (SOLUTION). NOTE: Make sure this setting matches the discharge configuration to ensure proper foam solution percentage.

1. Select the SETUP item in the main menu. Press the SELECT button to access this menu.
2. Select the 'WT. FL. SENS. LOC.' item. Enter this submenu using the SELECT button.
3. The display will show a list of options. To change the selection, press INCREASE or DECREASE button.
4. Press the SELECT button to apply the change. To return to the previous menu, press the ON/OFF button.

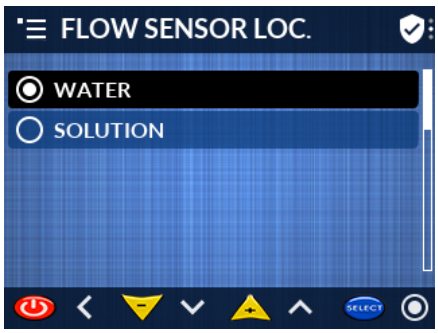

Reading Water Flow from Remote CAN Device (WT. FLOW SOURCE ID)

This setting selects the water flow reading source to be local, sensor connected to injector, or remote sensor connected to another device on the CAN network. Use "LOCAL" option if the sensor is connected to the injector, or select the "DEVICE ID" of the device providing the water flow reading.

1. Select SETUP item in the main menu. Press the SELECT button to access this menu.
2. Select 'WT. FLOW SOURCE ID.' item. Enter this submenu using the SELECT button.
3. The display will show a list of options. To change the selection, press INCREASE or DECREASE button.
4. Press the SELECT button to apply the change. To return to the previous menu, press the ON/OFF button.

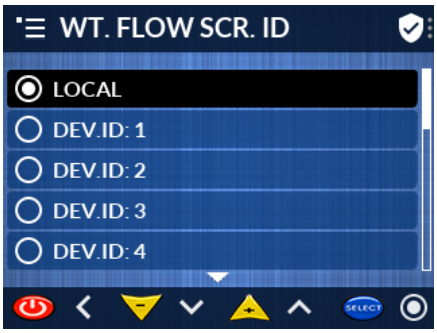

Hydraulic Controller Backup

The setting indicates if the Hydraulic Controller Backup option is installed.

1. Select SETUP item in the main menu. Press the SELECT button to access this menu.
2. Select 'HYD CNTL BACKUP' item. Enter this submenu using the SELECT button.
3. Press INCREASE or DECREASE buttons to select the desired option.
4. Press the SELECT button to apply the change. To return to the previous menu, press the ON/OFF button.

Valve Polarity (for MAX200 Fusion models only)

Valve Polarity setting allows the valve direction of travel to be changed. If the valve opens when the ON/OFF button is pressed, or closes when the SELECT button is pressed, then the valve polarity setting must be changed.

1. Select SETUP item in the main menu. Press the SELECT button to access this menu.
2. Select 'VALVE POLARITY' item. Enter this submenu using the SELECT button.
3. The polarity settings list will be displayed with the current setting selected. To change this setting, press INCREASE or DECREASE button to select the other setting. Press the SELECT button to apply the change. To return to the previous menu, press the ON/OFF button.

NOTE: After the polarity setting is changed, valve calibration is required. A message will be shown on the display prompting the user to calibrate the valve. To immediately perform valve calibration, press the SELECT button. To perform calibration later, press the ON/OFF button. *The valve will not work correctly until the calibration is done.*

Flow Cut-off

The Flow Cut-off setting determines the lowest flow rate that will be displayed. Any flow rate below the set value will be shown as 0.

1. Select SETUP item in the main menu. Press the SELECT button to access this menu.
2. Select 'FLOW CUT-OFF' item. Enter this submenu using the SELECT button.
3. The display will show the current Flow Cut-Off value selected. To change the preset value, use the SELECT button to increase, and the ON/OFF button to decrease the value.
4. To save the new Flow Cut-Off value, press INCREASE or DECREASE button until 'SAVE AND RETURN' item is selected. Press the SELECT button to save the new value, and return to the previous menu. Or, press the ON/OFF button to cancel the change.

Flow Increment Adjustment

The measured flow value is displayed with default increment of 1 unit. This increment can be adjusted to suit an operator's preference. For example, if the increment is changed to 10, then the displayed value will be rounded to nearest 10.

1. Select SETUP item in the main menu. Press the SELECT button to access this menu.
2. Select to 'FLOW INCREMENT' item. Enter this submenu using the SELECT button.
3. A list of the increments will be displayed with the current setting selected. To change this setting, press INCREASE or DECREASE button to select the new value. Press the SELECT button to apply the change. To return to the previous menu, press the ON/OFF button.

CAN Message Rate

Runtime data is updated (refreshed) at a preset time interval. It is recommended to leave this setting at the indicated default. However, this interval can be adjusted if required.

1. Select SETUP in the menu screen by pressing the INCREASE or DECREASE button. Press the SELECT button to access this menu.
2. Select the MSG RATE item and press the SELECT button to access this menu.
3. Using the PRESET button, select the new setting from the list. Press the SELECT button to confirm the selection.
4. To return to the previous menu screen, press ON/OFF button.

Export Configuration

After Setup is completed and the user settings are determined, all of this data can be saved to an external configuration file on a USB device. This file can be used to restore settings to a replacement unit or transfer them another apparatus.

1. Select SETUP item in the main menu. Press the SELECT button to access this menu.
2. Select to 'EXPORT CONFIG.' item. Enter this submenu using the SELECT button.
3. In the Export Config. submenu, there are two choices. First is 'SAVE FILE', which will save the configuration file under a default name onto the USB device. The second item allows the user to change the file name.

Saving Configuration File:

1. On the back of the unit, remove the USB access port cap located next to the wiring connector. Twist the cap *counterclockwise* to open it. Insert the USB device into the USB connector.
2. Select 'SAVE FILE' item. Press SELECT button to save the file. If the file was saved successfully, a confirmation dialog box will be displayed. If the file was not saved, then an error message will be displayed in the dialog box.

NOTE: The file will be saved on the USB device in SF Directory. This file will be saved with the default name 'CONFIG.INI'.

Changing Configuration File Name:

If needed, the configuration file name can be changed before saving. This will allow for multiple configuration files to be saved on the same USB device.

1. In the EXPORT CONFIG submenu, select the CHANGE FILE NAME item. Press the SELECT button to edit the file name.

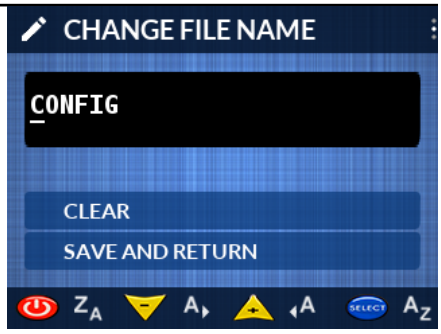

2. The current file name will be highlighted for editing with the cursor blinking. Use the SELECT button to change to the next character at the cursor position. Use ON/OFF button to select the previous character in the cursor position. Use the INCREASE or DECREASE button move the cursor to the next position. Pressing and holding the SELECT or ON/OFF buttons will cycle through available characters automatically.
3. When editing is completed, press the INCREASE or DECREASE button until the cursor reaches the end of the name field. The next press of the INCREASE or DECREASE button will select 'CLEAR' item of this screen. Or, press and hold the INCREASE or DECREASE button to until the 'CLEAR' item is selected.
4. If the name does not need corrections, press the INCREASE or DECREASE button select 'SAVE AND RETURN' item. When the 'CLEAR' item is selected, pressing the SELECT button will clear the file name entry.
5. When 'SAVE AND RETURN' item is selected, press the SELECT button to save the entered file name and the unit will return to the previous menu. To cancel any changes, press the ON/OFF button to exit and return to the previous menu. If further changes are needed to edit the name, press the INCREASE or DECREASE button to select the file name text on the screen.

Loading Configuration

The display module can be configured from data stored in a file that was previously saved to a USB device. This data will update all the parameters for the display module. The configuration should be placed in '**SF**' directory of the USB device.

1. On the back of the unit, remove the USB access port cap located next to the wiring connector. Twist the cap *counterclockwise* to open it. Insert the USB device into the USB connector.
2. Select SETUP item in the main menu. Press the SELECT button to access this menu.
3. Select to 'LOAD CONFIG.' item. Enter this submenu using the SELECT button.
4. From the displayed list of files, select the file to be loaded. Press the SELECT button to confirm this choice.
5. Warning dialog box will be displayed. Press the SELECT button to load this file and apply the changes.
6. Cycle the power on and off to the display module. Process is now complete.

9. USER SETTINGS

Adjusting User Settings

Reset Accumulated Water and Foam Totals

AccuMax hardware components measure and collect consumption data on water and foam. These numbers are recorded in an event log each time the system is turned off. These totals are automatically reset at startup. However, they can be reset at any time from the menu.

1. Select USER SETTINGS on the menu screen. Press INCREASE or DECREASE button until the user setting is selected. Press SELECT button to access the submenu options.
2. Select the RESET TOTALS item from this list. Press SELECT button to initiate reset.
3. Confirm reset by pressing the SELECT button after the dialog box appears.

Water Valve Preset (MAX200 Fusion model only)

The most frequently used water valve position can be programmed and recalled as a preset.

Programming Preset in Operator's Screen:

1. Using the SELECT, INCREASE or DECREASE buttons, move the valve to the desired preset position.
2. Press and hold the INCREASE or DECREASE button for approximately 5 seconds. Current valve position will be saved as the new preset.
3. The preset indicator will move to the new preset value.

Discharge Name Configuration

The display module can be set to display a custom name to identify the discharge it is used with. This name can be selected from a predefined list or a custom name can be created. This name will be displayed in the Header bar in the Operator screen.

1. Select USER SETTINGS on the menu screen by pressing the INCREASE or DECREASE button. Press the SELECT button to access this menu.
2. Select the NAME menu with the INCREASE or DECREASE button and press the SELECT button to enter this menu.
3. To choose a predefined name, select menu item 'SELECT FROM LIST'. Press the SELECT button to enter names list.
4. Select the desired name with the INCREASE or DECREASE button and press the SELECT button change the setting.
5. To create a custom name from 'NAME' menu, select EDIT NAME. Press the SELECT button to enter 'EDIT NAME' screen. When screen is loaded, current name is displayed and highlighted for editing.
6. If name is highlighted for editing, use the SELECT button to change to the next character at the cursor position. Use ON/OFF button to select the previous character in the cursor position. Use the INCREASE or DECREASE button to move the cursor to the next position. Pressing and holding the SELECT or ON/OFF buttons will cycle through available characters automatically.

7. When editing is completed, press the INCREASE or DECREASE button until the cursor reaches the end of the name field. The next press of the INCREASE or DECREASE button will select 'CLEAR' item of this screen. Or press and hold the INCREASE or DECREASE button to until the 'CLEAR' item is selected.
8. If the name does not need corrections, press the INCREASE or DECREASE button and select 'SAVE AND RETURN' item. When the 'CLEAR' item is selected, pressing the SELECT button will clear the name entry.
9. Press the INCREASE or DECREASE button to select 'SAVE AND RETURN' item on this screen. To save the new name, press the SELECT button and the unit will return to the previous menu. To cancel any changes, press the ON/OFF button to exit and return to the previous menu. If further changes are needed to edit the name, press the INCREASE or DECREASE button to select the name text on the screen.

Importing Custom Name List:

A custom name list can be imported from a USB device into the unit. The imported list will replace the default list.

1. Create a plain text file on a computer and save this file as "namelist.txt". (This file name must be in all lowercase letters and the file extension should end with ".txt")
2. From a computer, open the "nameslist.txt" file to add the custom list.
3. Add each name on a separate line for this file. (The custom name should not exceed 24 characters in length.)
4. Save this file and copy it to a USB device into the "SF"directory (folder), and create the "SF" directory (folder) if it does not exist.
5. On the back of the unit, remove the USB access port cap located next to the wiring connector. Twist the cap *counterclockwise* to open it. Insert the USB device into the USB connector.
6. In NAME submenu, select 'IMPORT NAME LIST'.
7. Press the SELECT button to load names list file. If successful, a confirmation dialog box will be displayed.
8. Reset the power to the unit. After the unit restarts, the new custom list will be available in the 'SELECT FROM LIST' submenu.
9. After removing USB device from the back of the unit, replace the USB access port cap and turn clockwise to tighten it.

NOTE: To restore the default name list, create an empty "namelist.txt" file and repeat the "Importing Custom Name List" process.

Assigning Color Code

If color coding is used on the apparatus, the display module can be assigned a color that matches the apparatus color scheme. This color will be used for the Header background in the operator screen. The display module color options match NFPA standards.

1. Select USER SETTINGS on the menu screen by pressing the yellow INCREASE or DECREASE button. Press the SELECT button to access this menu.
2. Select the COLOR CODE item and press the SELECT button to access this menu.
3. A list of colors will be displayed with current colored selected. Using the yellow INCREASE or DECREASE button, select a color desired color code. Press the SELECT button to confirm the selection.
4. To return to the previous menu screen, press ON/OFF button.

Units of Measure (UOM)

The display module can be set to display information in Imperial or Metric units of measure. Several configurations of these units are available to choose to suit the operator's preference.

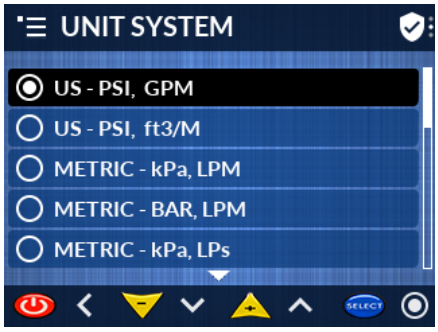

1. Select USER SETTINGS on the menu screen. Press INCREASE or DECREASE button until the user setting is selected. Press SELECT button to access the submenu options.
2. Select the UNITS SYSTEM item from this list. Press SELECT button to access list of options.
3. Use the INCREASE or DECREASE button to select the desired UOM combination. Press the SELECT button to confirm the selection. If the ON/OFF button is pressed before pressing the SELECT button, no changes will be made.
4. To return to the previous menu screen, press ON/OFF button.

Foam Proportioning Rate Presets

The AccuMax system is equipped with a programmable foam proportioning preset feature. Presets allow the operator to quickly select the foam proportioning rate recommended for the foam concentrate products currently being used, or for different scenarios during fire operations. Presets are programmed individually for each discharge. Between 1 and 5 presets are possible for programming. Presets can be programmed between 0.1 to 10.0%, with 0.1% increments. One of the presets can be set as the default. The default proportioning rate preset is displayed upon powering up the system. The DISPLAY MODULE menu allows for making adjustments related to presets: adding a new preset, changing the value of an existing preset, deleting a preset and selecting a default preset.

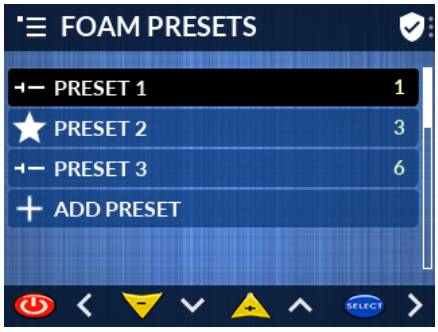

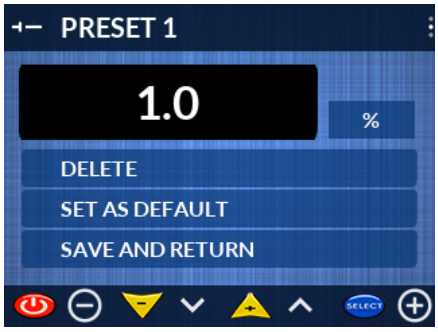

Adding New Preset:

1. Select USER SETTINGS on the menu screen. Press INCREASE or DECREASE button until the user setting item is selected. Press SELECT button to access the submenu.
2. In USER SETTINGS, select the 'FOAM PRESETS' item using the INCREASE or DECREASE button. Press the SELECT button to enter the foam presets submenu.
3. Current list of foam proportioning rate presets will be displayed. If there are less than 5 presets programmed, item '+ ADD PRESET' will be available at the end of the list. Press INCREASE or DECREASE button until the '+ ADD PRESET' item is selected. Press the SELECT button to add the new preset.
4. The Preset Entry screen will open and display "1.0%" as the initial preset in this field. Use the ON/OFF or SELECT buttons respectively to decrease or increase the value until the desired proportioning rate is reached. Holding down either button will cause the rate to change by 0.5%.
5. To save the new preset, press INCREASE or DECREASE button until the 'SAVE AND RETURN' item is selected. Press the SELECT button to commit the change, or press the ON/OFF button to cancel the change.

NOTE: If the value entered already exists as a preset, a duplicate preset will not be saved. The preset list will be updated and sorted after a new preset is added.

Changing Existing Preset Value

1. Select USER SETTINGS on the menu screen by pressing INCREASE or DECREASE button until the USER SETTINGS item is selected. Press SELECT button to access the submenu.
2. In USER SETTINGS, select the 'FOAM PRESETS' item using the INCREASE or DECREASE button. Press the SELECT button to enter the 'FOAM PRESETS' submenu.
3. The current list of foam proportioning rate presets will be displayed. Value of each preset is displayed on the right side of the menu item. Press INCREASE or DECREASE button until the preset to be changed is selected. Press the SELECT button to edit the preset value.
4. Preset entry screen will open and preset value field with current value will be selected. Use ON/OFF or SELECT button respectively to decrease or increase value until new desired proportioning rate is reached. Holding down either button will make rate change by 0.5%.
5. To save new value for the preset press INCREASE or DECREASE button until the 'SAVE AND RETURN' item is selected. Press the SELECT button to commit the change, or press the ON/OFF button to cancel the change (initial value will be restored).

NOTE: If the value entered already exists as a preset, a duplicate preset will not be saved. The preset list will be updated and sorted after a new preset is added.

Deleting Preset Value:

1. Select USER SETTINGS on the menu screen. Press INCREASE or DECREASE button until USER SETTINGS item is selected. Press SELECT button to access the submenu.
2. In USER SETTINGS, select the 'FOAM PRESETS' item using the INCREASE or DECREASE button. Press the SELECT button to enter the foam presets submenu.
3. The current list of foam proportioning rate presets will be displayed. Value of each preset is displayed on the right side of the menu item. Press INCREASE or DECREASE button until the preset to be deleted is selected. Press the SELECT button to enter the PRESET ENTRY screen.
4. The preset entry screen will open and the current preset value will be selected in this field. Press INCREASE or DECREASE button until the 'DELETE' item is selected. Press the SELECT button to delete this preset. The updated Preset list will be loaded after deletion is completed. To cancel delete action, press INCREASE or DECREASE button until the 'SAVE AND RETURN' item is selected. Press ON/OFF button to cancel and return to preset list.

NOTE: If preset list has only 1 defined preset, this preset cannot be deleted ('DELETE' item will not be available). Preset value can be edited instead.

Setting Default Preset:

Default preset holds the foam proportioning rate to be automatically set after powering up the system.

Default preset is indicated with a star icon on preset list.

1. Select USER SETTINGS on the menu screen by pressing INCREASE or DECREASE button until the USER SETTINGS item is selected. Press SELECT button to access the submenu.
2. In USER SETTINGS, select the 'FOAM PRESETS' item using the INCREASE or DECREASE button. Press the SELECT button to enter the foam presets submenu.
3. The current list of foam proportioning rate presets will be displayed. Value of each preset is displayed on the right side of the menu item. The current default preset will be marked with a star icon. Press INCREASE or DECREASE button to select another preset to be set as the default. Press the SELECT button to enter preset entry screen.

4. The preset entry screen will open and the preset value field with current value will be selected. Press INCREASE or DECREASE button until the 'SET AS DEFAULT' item is selected. Press the SELECT button to mark this preset as the default. The icon in top-left corner of the screen will change to a star.

5. To save the new default preset, press INCREASE or DECREASE button until the 'SAVE AND RETURN' item is selected. Press the SELECT button to commit the change, or press the ON/OFF button to cancel the change (initial default will be restored).

NOTE: If only one preset is defined, it will become the default preset automatically. If the default preset is deleted, the first preset on the list is automatically set as the default.

Fixed Display Variable

This setting enables the operator to select from the system measured variables to be displayed in a fixed numerical display located at the top area of the screen. See the display screen layout for details. Once selected, the value for the displayed variable will be continuously updated. The fixed variables for this display are as follows:

- FOAM FLOW (for associated discharge)
- FOAM TOTAL (accumulated volume for associated discharge)
- FOAM FLOW SYS. (for entire system)
- FOAM TOTAL SYS. (accumulated volume for entire system)
- FOAM TANK LEVEL [%] *
- FOAM TIME TO EMPTY (estimated time to empty foam tank at current consumption rate) *
- FOAM PRESSURE SYS. (foam manifold pressure)
- WATER PRESSURE (discharge water pressure – **MAX200 Fusion model only**)
- WATER FLOW (for associated discharge)
- WATER TOTAL (accumulated volume for associated discharge)
- WATER TOTAL SYSTEM (accumulated volume for entire system)

NOTE: *Requires TankVision Pro Tank Vision Gauge

1. Select USER SETTINGS on the menu screen by pressing INCREASE or DECREASE button until the USER SETTINGS item is selected. Press SELECT button to access the submenu.

2. In USER SETTINGS, select the 'FIXED DISPLAY' item using the INCREASE or DECREASE button. Press the SELECT button to enter the submenu.

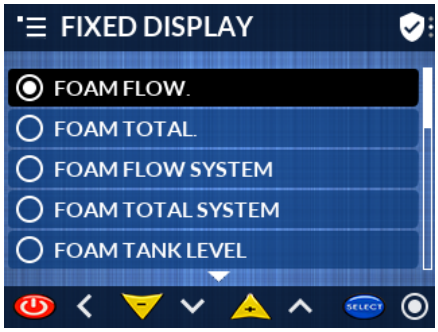

3. List of variables will be displayed. Press INCREASE or DECREASE button until the desired variable is highlighted. Press the SELECT button to mark the highlighted variable as selected and commit the change.

4. Press ON/OFF button to return to previous menu.

Selectable Display Settings

The selectable numerical display is located in bottom area of the screen. This display allows the pump operator to monitor a number of selected system measured variables during fire operations. Choose from the variables to be displayed by pressing the SELECT button. This submenu contains settings related to the Selectable Display.

1. Select USER SETTINGS on the menu screen by pressing the INCREASE or DECREASE button. Press the SELECT button to access this menu.

2. In USER SETTINGS, select the 'SELECTABLE DISPLAY' item using the INCREASE or DECREASE button. Press the SELECT button to enter the submenu.

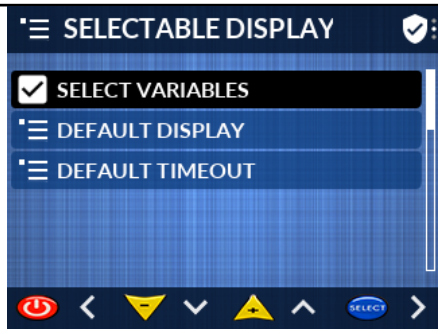

Select Variables for Selectable Display

This submenu lists all variables available for the Selectable Display. Each variable can be individually enabled or disabled for this display. Available choices are:

- FOAM FLOW (for associated discharge)
- FOAM TOTAL (accumulated volume for associated discharge)
- FOAM FLOW SYS. (for entire system)
- FOAM TOTAL SYS. (accumulated volume for entire system)
- FOAM TANK LEVEL [%] *
- FOAM TIME TO EMPTY (estimated time to empty foam tank at current consumption rate) *
- FOAM PRESSURE SYS. (foam manifold pressure)
- WATER PRESSURE (discharge water pressure – **MAX200 Fusion model only**)
- WATER FLOW (for associated discharge)
- WATER TOTAL (accumulated volume for associated discharge)
- WATER TOTAL SYSTEM (accumulated volume for entire system)

NOTE: *Requires TankVision Pro Tank Vision Gauge

1. Select USER SETTINGS on the menu screen by pressing the INCREASE or DECREASE button. Press the SELECT button to access the submenu.
2. In USER SETTINGS, select the 'SELECTABLE DISPLAY' item using the INCREASE or DECREASE button. Press the SELECT button to enter the submenu.
3. In SELECTABLE DISPLAY, select the 'SELECT VARIABLES' item using the INCREASE or DECREASE button. Press the SELECT button to enter the submenu.
4. List of variables will be displayed. Press INCREASE or DECREASE buttons to select variables as needed. Press the SELECT button to enable or disable the selected variable. Checkbox icon will reflect the change that was made.
5. Press ON/OFF button to return to the previous menu.

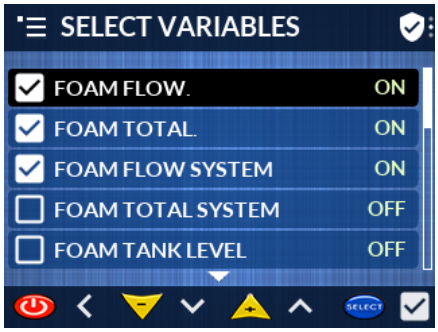

Default Variable for Selectable Display

This submenu allows the operator to select a variable to be used as the default for the Selectable Display. The default variable will be loaded into the Selectable Display on power-up and after timeout, if timeout is set.

1. Select USER SETTINGS on the menu screen by pressing the INCREASE or DECREASE button. Press the SELECT button to access this menu.
2. In USER SETTINGS, select the 'SELECTABLE DISPLAY' item using the INCREASE or DECREASE button. Press the SELECT button to enter the submenu.

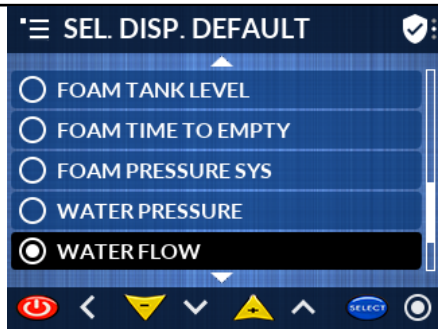

3. In SELECTABLE DISPLAY, select the 'SELECT VARIABLES' item using the INCREASE or DECREASE button. Press the SELECT button to enter the submenu.
4. List of variables will be displayed. Press INCREASE or DECREASE button to highlight desired variable. Press the SELECT button to mark the highlighted variable as the default.
5. Press ON/OFF button to return to previous menu.

Default Timeout for Selectable Display

Default Timeout setting determines if, and after what time, the default variable is restored to the Selectable Display. If the value for this setting is 'NEVER', the Selectable Display will continue displaying the current variable until it is changed by pressing the SELECT button. If Default Timeout is set with a specific duration, the Selectable Display will resume displaying the default variable after this duration has expired from last press of the SELECT button.

1. Select USER SETTINGS on the menu screen by pressing the INCREASE or DECREASE button. Press the SELECT button to access this menu.
2. In USER SETTINGS, select the 'SELECTABLE DISPLAY' item using the INCREASE or DECREASE button. Press the SELECT button to enter the submenu.

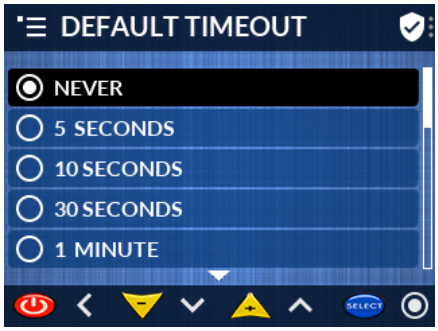

3. In SELECTABLE DISPLAY, select the 'SELECT VARIABLES' item using the INCREASE or DECREASE button. Press the SELECT button to enter the submenu.
4. List of variables will be displayed. Press INCREASE or DECREASE button to the highlight desired variable. Press the SELECT button to mark the highlighted variable as the default.
5. Press ON/OFF button to return to the previous menu.

Default Simulated Water Flow

Default Simulated Water Flow setting allows operator to preprogram value of simulated water flow. This value is automatically set when Simulated Water Flow mode is turned ON during operation.

NOTE: This setting's value is shown in the current unit of measure (UOM). Ensure the desired unit of measure is set first. When the UOM is changed, the value for the Default Simulated Water Flow will be reset.

1. Select USER SETTINGS on the menu screen by pressing the INCREASE or DECREASE button. Press the SELECT button to access this menu.
2. In USER SETTINGS, select the 'DEF. SIM. WATER FLOW' item using the INCREASE or DECREASE button. Press the SELECT button to change this value.

3. Entry screen will open. Value field will be selected and will read the current simulated water flow. Use the ON/OFF or SELECT buttons respectively to decrease or increase the Default Simulated Water Flow Rate value until the new desired setting is reached. Holding down either button will change the value automatically in larger increments.
4. To save the new value, press INCREASE or DECREASE button until the 'SAVE AND RETURN' item is selected. Press the SELECT button to save the change, or press the ON/OFF button to cancel the change (initial value will be restored).

Simulated Water Flow Mode Adjustment Increments

These settings allow the operator to set flow rate increments to be used when unit is operating in Water Simulation Mode. Simulated water flow rate will decrease/increase by this amount when INCREASE or DECREASE buttons are pressed (minor increment) or held down (major increment).

Menu item: SIM. WT. FLOW INC. – minor increments for simulated water flow adjustment

Menu item: SIM. WT. FLOW M. INC. – major increment for simulated water flow adjustment

1. Select USER SETTINGS on the menu screen by pressing the INCREASE or DECREASE button. Press the SELECT button to access this menu.
2. In USER SETTINGS, select the 'SIM. WT. FLOW INC.' (for minor increment setting) or 'SIM. WT. FLOW M. INC.' (for major increment setting) item using the INCREASE or DECREASE button. Press the SELECT button to change the value.
3. Entry screen will open. Value field will be selected and the current adjustment increment will be read. Use the ON/OFF or SELECT buttons respectively to decrease or increase the value until the desired new setting is reached. Hold down either button to automatically edit the valve in greater increments.
4. To save the new value press the INCREASE or DECREASE button until the 'SAVE AND RETURN' item is selected. Press the SELECT button to save the change, or press the ON/OFF button to cancel the change (initial value will be restored).

Set Date and Time

These settings allow the operator to set the date and time for all AccuMax system components and other FRC products that feature a built-in date/time clock. Date and time is used to time stamp events recorded in a display module log. If date/time is not set, the log will use elapsed time since the last power-up instead.

NOTES:

- Date and Time information for the AccuMax system is kept in the Hydraulic Controller device. The Hydraulic Controller is equipped with a battery backup to maintain the date and time when the system is powered OFF. Make sure this device is connected to the CAN network, powered and operational before changing the date/time.
- Date and Time needs to be set only once for the entire system. All display modules and other devices will synchronize their internal clocks when this setting is changed, or within one minute since it has been connected to the CAN network.
- Check if the date/time setting is correct after replacing or servicing the Hydraulic Controller.

1. Select USER SETTINGS on the menu screen by pressing the INCREASE or DECREASE button. Press the SELECT button to access this menu.
2. In USER SETTINGS, select the 'SET DATE/TIME' item using the INCREASE or DECREASE button. Press the SELECT button to enter the date and time setting screen.
3. Date time screen will open. The layout of the data field on this screen will match set date and time formats. Active data field will be highlighted in black. Use ON/OFF or SELECT buttons respectively to decrease or increase the value of active data field. Hold down either button to change value automatically. Press INCREASE or DECREASE buttons to the change active data field that needs to be changed.
4. When all data fields are set, press INCREASE or DECREASE button until the 'SAVE AND RETURN' item is selected. Press the SELECT button to set date and time for the system, or press the ON/OFF button to cancel (date and time will not be changed).

Set Date Format

This settings allows the operator to set the preferred format for date for the display and device log.

1. Select USER SETTINGS on the menu screen by pressing the INCREASE or DECREASE button. Press the SELECT button to access this menu.
2. In USER SETTINGS, select the 'DATE FORMAT' item using the INCREASE or DECREASE button. Press the SELECT button to enter the submenu.
3. List of available formats will be displayed. Press INCREASE or DECREASE button to highlight the desired date format. Press the SELECT button to apply your revision to the format.
4. Press ON/OFF button to return to previous menu.

Set Clock Format

This settings allows the operator to set the preferred time format to 12 hours or 24 hours clock.

1. Select USER SETTINGS on the menu screen by pressing the INCREASE or DECREASE button. Press the SELECT button to access this menu.
2. In USER SETTINGS, select the 'TIME FORMAT' item using the INCREASE or DECREASE button. Press the SELECT button to enter the submenu.
3. Press INCREASE or DECREASE button to highlight 12 HOURS or 24 HOURS format. Press the SELECT button to apply your selection.
4. Press ON/OFF button to return to the previous menu.

Display

Display Brightness

The AccuMax system will automatically switch the screen appearance and brightness level to match ambient light. Brighter color scheme and higher brightness intensity is used for daylight. Darker color scheme and lower intensity is used for nighttime. Screen brightness can be adjusted individually for daytime and nighttime.

1. In the main menu, press the INCREASE or DECREASE button to select DISPLAY item. Press the SELECT button to access this submenu.
2. Select the DISPLAY BRIGHTNESS item and press the SELECT button to enter this submenu.
3. Select BRIGHTNESS DAY or BRIGHTNESS NIGHT item and press the SELECT button to enter the adjustment screen.
4. In adjustment screen, there is a brightness level slider highlighted in black. Use the SELECT button to increase brightness and use the ON/OFF button to decrease brightness. NOTE: Screen brightness will change at the time of adjustment. There is a predefined minimum brightness limit for each setting.
5. Once the desired level is set, press the INCREASE or DECREASE button to select 'SAVE AND RETURN' item. Press the SELECT button to save changes and return to previous menu. Or, press the ON/OFF button to cancel changes and return to previous menu.

Setting Day/Night Mode

The Day/Night mode determines how the unit reacts to ambient light. There are a number of options to select:

- AUTO LOCAL (Default) – Day/Night mode will change automatically based on the ambient light measured by the unit's built-in light sensor.
- DAY ONLY – Day mode will always be used regardless of ambient light.
- NIGHT ONLY – Night mode will always be used regardless of ambient light.
- AUTO REMOTE – This is used with units wired in network configuration. Day/night mode will follow the mode of the master unit on the network.
- AUTO MASTER – Day/Night mode will change automatically based on the ambient light measured by the unit's built-in light sensor. Message will be sent to all remote units on the network to change their day/night mode to match the master. NOTE: When this option is selected, any other unit that was set to Auto Master will automatically change its setting to Auto Remote.

To change these settings:

1. Select DISPLAY item on main menu screen. Press the SELECT button to access this menu.
2. Select DAY/NIGHT MODE item in the Display menu. Press the SELECT button to access this menu.
3. Select the desired setting using the INCREASE or DECREASE button. Press the SELECT button to accept the selection.
4. When the selection is made, use the ON/OFF button to return to previous menu.

Day/Night Threshold

Day/Night Threshold setting determines the level of ambient light required to switch day/night mode. The higher the setting, the more ambient light is required to switch to day mode. The lower the setting, the less ambient light is required to switch modes.

1. Select DISPLAY on the main menu. Press the SELECT button to access the submenu.
2. Select D/N THRESHOLD in the DISPLAY menu. Press the SELECT button to access the adjustment screen. Scroll down to the DAY/NIGHT THRESHOLD option and select it with INCREASE or DECREASE button. Enter this submenu using the SELECT button.
3. In adjustment screen, there is a threshold level slider highlighted in black. Use the SELECT button to increase threshold level and use the CLOSE button to decrease it.
4. Once the desired level is set, press the INCREASE or DECREASE button to select 'SAVE AND RETURN' item. Press the SELECT button to save changes and return to previous menu. Or, press the ON/OFF button to cancel changes and return to previous menu.

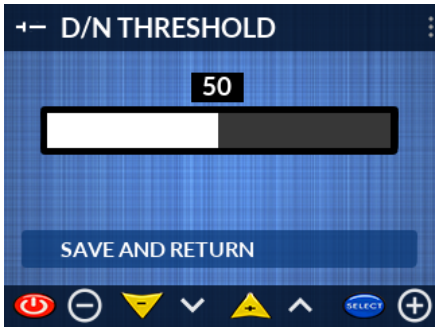

Report Functions

Report feature of the AccuMax system is used to record the consumption of water and foam concentrate by the system for each incident of system use. Incident data can be reviewed using any AccuMax display module. If needed, stored data can be exported as a CSV file and saved on an external USB device.

Report recorded for each incident data will contain:

- Date and time when incident started *
- Date and time when incident ended *
- Total volume of water discharged
- Total volume of foam concentrate used by system

* If date is not set, elapsed time from the system start will be used instead

By default, the last 20 incidents are recorded. Oldest incident will be deleted when the number of incidents exceeds the default number.

What is AccuMax Use Incident?

An incident is defined as an event when the AccuMax system is used to deliver foam and/or water. A new incident is created for each power-up of the system. If the system is not used to deliver foam or water during the current power cycle, the incident data will not be saved.

An incident data recording begins when the AccuMax system detects the system total volume of foam concentrate, or when the total volume of water begins to increase (while the system is flowing water and/or foam). At that time, the incident start date/time is recorded. 'REPORT INCIDENT START' message will be displayed in the message bar briefly to indicate the beginning of the recording.

The current Incident's data is updated and saved when the total volume of foam concentrate <u>and</u> total volume of water remains unchanged for approximately 10 seconds (system water flow and foam flow are equal to 0). This usually happens when the system operation has finished. 'REPORT UPDATED' message will be displayed in the message bar briefly to indicate the data was updated.

NOTE: If the AccuMax system operation has resumed, incident data recording will continue.

An incident ends when the system is powered-down. Keep the system powered on for at least 10 seconds after the AccuMax system has been in use. Within this time, the report data will be updated and saved. Power can be disconnected as needed.

Creating New Incident Manually

If the AccuMax system is used for more than one fire operation while it remains connected to power, each subsequent fire operation can be individually recorded by creating a new report incident before the new operation has been started. This is achieved by reseting all accumulated system totals.

To create a new incident in the Report feature:

1. Make sure foam delivery is turned off on all displays and the system does not see any water flow.
2. Select 'USER SETTINGS' on the main menu. Press the SELECT button to access the submenu.
3. Select 'RESET TOTALS' in the submenu. Press the SELECT button reset all accumulated totals for water and foam. Confirm action with SELECT button when dialog is displayed.
4. Within 10 seconds, the AccuMax system will automatically create a new incident record. 'REPORT NEW INCIDENT' message will be briefly displayed in the message bar.

Reviewing Recorded Incident Data

Report consumption data for all recorded incidents can be reviewed by using any AccuMax Display module.

Reading the recorded data from Report:

1. Select 'REPORT' item in the main menu. Press the SELECT button to access the submenu.
2. Select 'READ REPORT' in the REPORT menu. Press the SELECT button to open incident list.
3. List of recorded incidents will be displayed. Incidents list is arranged newest to oldest. Current incident will be at the top of the list.

4. Use INCREASE or DECREASE button to select an incident to review. Press the SELECT button to open incident details.
5. While the 'incident data' screen is open, use the INCREASE or DECREASE button to read the details from next or previous incident. In the upper right corner of the screen, the number of the current incident is displayed, along with the total number of incidents in the report.
6. Press the ON/OFF button to close the 'incident data' screen and return to the previous menu.

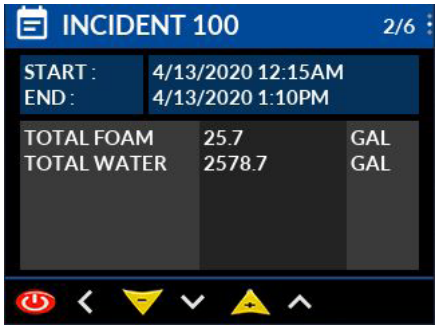

Exporting Report File to External USB Device

Recorded incident report can be saved to an external USB device. File is saved in CSV format for easy viewing on a computer.

1. On the back of the unit, remove the USB access port cap located next to the wiring connector. Twist the cap counterclockwise to open it. Insert the USB device into the USB connector.
2. Select 'REPORT' item in the main menu. Press the SELECT button to access the submenu.
3. Select 'EXPORT REPORT' in the 'REPORT' menu. Press the SELECT button to start export. When file exporting has been successfully completed, the confirmation message will appear.

NOTE: The file will be saved on the USB device in 'SF/report' directory. File will be saved with a '.csv' extension and can be opened using spreadsheet program like Excel, or as text with any text editor program.

4. Remove USB device from the unit and replace the USB access port cap.

Event Log Functions

The AccuMax system is equipped with log feature, which records events during operation. Recorded events are:

- Total Water Volume Accumulated–Recorded each time the valve is fully closed.
- Parameter Change–Recorded when settings/parameters have been changed.
- Error and Warning–Recorded when at the start of an error/warning condition and when it ends.

The events are recorded in log files, which are stored into the internal memory. Every time the valve controller starts up, a new log file is created. These log files can be viewed from within the valve controller menu, or copied onto a USB device.

Reading the Current Log

1. Select 'EVENT LOG' on the main menu. Press the SELECT button to access the submenu.
2. Select 'CURRENT LOG' in the EVENT LOG menu. Press the SELECT button to read the current log.
3. The first log entry will be displayed.
4. Press the INCREASE or DECREASE button to display the next log entry. In the upper right corner, the number of the current log entry is displayed, along with the total number of entries.
5. Press the ON/OFF button to close the event log and return to the previous menu.

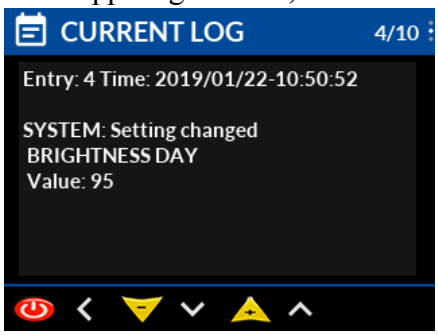

Reading the Previous Log

1. Select 'EVENT LOG' on the main menu. Press the SELECT button to access the submenu.
2. Select 'OPEN PREVIOUS LOG' in the EVENT LOG menu. Press the SELECT button to open the log file list.
3. Press the INCREASE or DECREASE button to select the item with the log file name to be opened. Press the SELECT button to read the selected log file.
4. The first log entry will be displayed.
5. Press the INCREASE or DECREASE button to display the next log entry. In the upper right corner, the number of the current log entry is displayed, along with the total number of entries.
6. Press the ON/OFF button to close the event log and return to the previous menu.

Setting the Log Files Limit

Log files limit determines how many log files are saved into the internal memory. When the number of the files exceeds this limit, the oldest files are deleted.

1. Select 'EVENT LOG' on the main menu. Press the SELECT button to access the submenu.
2. Select 'LOG FILES LIMIT' in the EVENT LOG menu. Press the SELECT button to display the available options.

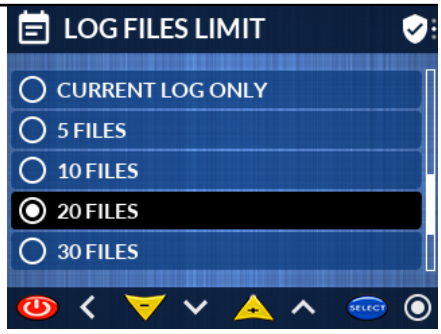

3. Press the INCREASE or DECREASE button to select the desired option. Press the SELECT button to confirm the selection.
4. Press the CLOSE button to return to the previous menu.

Exporting Log Files

Log files can be saved to an external USB device to be read later on a computer.

1. On the back of the unit, remove the USB access port cap located next to the wiring connector. Twist the cap *counterclockwise* to open it. Insert the USB device into the USB connector.
2. Select 'EVENT LOG' on the main menu. Press the SELECT button to access the submenu.
3. Select 'EXPORT ALL LOGS' in the EVENT LOG menu. Press the SELECT button to start export. When the warning dialog box appears, press the SELECT button to continue. When file exporting has been successfully completed, the confirmation message will appear.

   NOTE: The files will be saved on the USB device in SF Directory. These files will be saved with a '.log' extension. These files can be opened using any text editor program.
4. Remove USB device from the unit and replace the USB access port cap.

Deleting All Log Files

Log files can be deleted from the internal memory, if needed.

1. Select 'EVENT LOG' on the main menu. Press the SELECT button to access the submenu.
2. Select 'CLEAR ALL LOGS' in the EVENT LOG menu. Press the SELECT button to delete all files. A confirmation dialog box will appear. Press the SELECT button to continue with deleting log files.

10. FACTORY SETTINGS

Changing Factory Settings

NOTE: the shield icon indicates that this parameter requires an advanced user access level.

Demo Mode

Demo Mode allows for demonstration of product features and functions without connecting to an actual hardware component. To enable this option, follow these steps.

1. Select 'FACTORY' item in the main menu. Press the SELECT button to access this menu.
2. Select 'DEMO MODE' item. Press the SELECT button to display this submenu.
3. Press the INCREASE or DECREASE button until the 'ENABLE' item is selected. Press the OPEN button to select 'ENABLE' .
4. Press the MENU button to return to the Operator screen.
5. To disable demo mode, repeat steps 1-3, and select 'DISABLE' item.

   NOTE: Please cycle power to the valve controller whenever the demo option is enabled or disabled.

Changing Product Model

This feature is not supported on this product.

Factory Reset

This function restores the unit to factory settings. Performing a factory reset will erase all settings, except for the display module model. All system logs will be deleted. The setup process will need to be repeated.

1. Select 'FACTORY' item in the main menu. Press the SELECT button to access this menu.
2. Select 'FACTORY RESET' item. Press the SELECT button to initiate the reset.
3. When the dialog box appears, press the SELECT button to proceed with the reset, or the ON/OFF button to cancel the process.

Firmware Update

The firmware running on the display module can be updated if necessary. The updates will be provided by the manufacturer. The firmware update files will be saved on a USB device.

1. On the back of the unit, remove the USB access port cap located next to the wiring connector. Twist the cap *counterclockwise* to open it. Insert the USB device into the USB connector.
2. Cycle power to the display module. When the unit powers on, it will check the USB device for the firmware update files. If the files are found, the dialog box will be displayed.
3. Press the SELECT button to access the 'UPDATES' menu. Available updates will be listed. Depending upon the files saved on the USB device, the following options may be available:

- UPDATE SYSTEM–Update to the operating system
- UPDATE SPLASH SCR.–Update to splash screen

- UPDATE APPLICATION–New version of display module application
- START UPDATE(S)–Item to execute selected updates

4. Each of the firmware updates can be disabled or enabled as needed. In order to disable any updates, select the update with the INCREASE or DECREASE button, and press the SELECT button. This will open the submenu with a selection of the available options. For SYSTEM UPDATE or SPLASH SCREEN update, select YES or NO. For the UPDATE APPLICATION, select the version to be installed or 'NO UPDATE' if the application does not need to be updated.

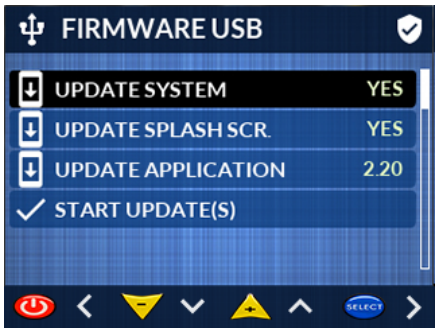

5. Press the ON/OFF button to return to the 'UPDATES' menu.
6. Select 'START UPDATES' item. Press the SELECT button to begin the update process. A warning dialog box will appear; press the OPEN button to continue.

   NOTE: The update process might take several minutes. Unit will restart several times, and the screen might be blank. Allow the process to continue uninterrupted; DO NOT DISCONNECT POWER!

7. When the firmware update has successfully been completed, the confirmation dialog box will appear. Press the SELECT button to register the newly installed version. Unit will restart.
8. If there are no further firmware updates to be done, remove the USB device and replace the USB device access port cap.

Restore Firmware

During the installation process, the previous version of the firmware is backed up into the internal memory. It is possible to restore this previous version and make the current application version inactive.

1. Select 'FACTORY' on the main menu. Press the SELECT button to access the submenu.
2. Select 'FIRMWARE UPDATE'. Press the SELECT button to access the submenu.
3. Select 'RESTORE FIRMWARE'. Press the SELECT button to access the submenu.
4. Current application version will be selected. Press the INCREASE or DECREASE button to select alternative version. Press the SELECT button to confirm the version change. When the warning dialog box appears, press the SELECT button to confirm the selection.
5. Display module will restart and will run the selected version of the application.

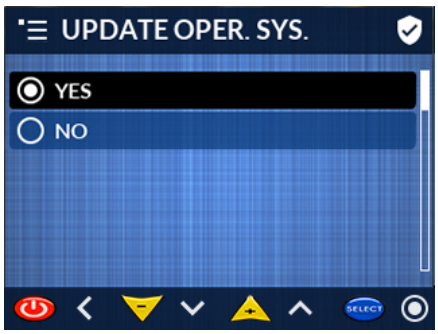

11. DIAGNOSTICS, TROUBLESHOOTING AND TESTING

Diagnostics Tools

To assist with troubleshooting and setup, a number of diagnostic tools are available within the valve controller.

Network Identification Utility

This feature allows the user, within a single button press, to view the all the APEX valve controllers' network ID numbers, paired valve serial numbers and day/night mode settings. This helps determine if there are no network conflicts and that all valves were paired correctly.

1. Select 'DIAGNOSTICS' item in the main menu. Press the SELECT button to access this menu.
2. Select 'IDENTIFY' item. Press the SELECT button to display the information.
3. To cancel the information screen on the valve controller, press any button. To cancel the information screen on all networked valve controllers, press and hold any button until the display reverts back to the previous screen.

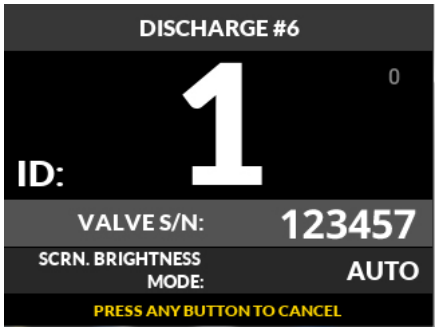

Diagnostics Screen Utility

When activated, operator screen will be replaced with the diagnostics screen, which provides detailed information on the valve controller and the CAN network parameters.

1. Select 'DIAGNOSTICS' item in the main menu. Press the SELECT button to access this menu.
2. Select 'DIAG SCREEN' item. Press the SELECT button to display this submenu.
3. Press the INCREASE or DECREASE button until the 'ENABLE' item is selected. Press the SELECT button to select 'ENABLE' .
4. Press the MENU button to return to the Operator screen. The diagnostic information will now be displayed. Valve can be operated normally.

List of displayed parameters are:

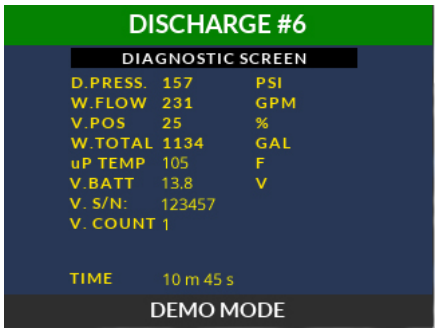

- D.PRESS–Discharge Pressure Value
- W. FLOW–Water Flow Rate
- V. POS–Valve Opening Position (0 - 100%)
- W. TOTAL–Total Water Volume since power up or reset
- uP TEMP–Internal Circuitry Temperature
- V. BATT–Valve Controller Supply Voltage
- V S/N–Paired Valve Serial Number
- V. COUNT–Number of Valved with Matching ID
- TIME–Time Elapsed from Startup, or Date and Time (if realtime clock device is present on the network)

5. To cancel the Diagnostics screen, cycle power to the valve controller.

   Or continue to step 6.
6. Select 'DIAGNOSTICS' item in the main menu. Press the SELECT button to access this menu.

7. Select 'DIAG SCREEN' item. Press the SELECT button to display this submenu.
8. Press the INCREASE or DECREASE button until the 'DISABLE' item is selected. Press the SELECT button to select 'DISABLE' .

Firmware Revision Information

To determine the current software revisions, follow the steps below.

1. Select 'DIAGNOSTICS' item in the main menu. Press the SELECT button to access this menu.
2. Select 'FIRMWARE REV.' item. Press the SELECT button to display this submenu.

   The list of current revisions will be displayed:

- FIRMWARE REV.–Installed active application
- GUI REV.–User Interface version
- DRIVER REV.–Firmware driver version
- VALVE SW. REV.–Valve actuator firmware revision (if valve is connected)

Hardware Information

Current hardware setting will be displayed through the following steps.

1. Select 'DIAGNOSTICS' item in the main menu. Press the SELECT button to access this menu.
2. Select 'HARDWARE' item. Press the SELECT button to display this submenu.

- ID–Network ID
- VALVE S/N–Valve Serial Number (if valve is connected)
- VALVE TYPE–Valve Polarity Setting
- VALVE SENSORS–Valve Sensor Settings
- KEYPAD–Controller Keypad Type

Active Error/Warning

All active error/warning codes can be reviewed when needed through the menu system.

Accessing Active Error/Warning List

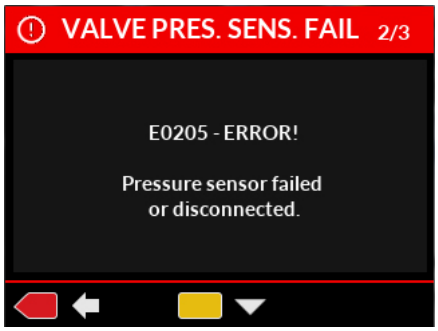

1. Select 'ACTIVE WARN./ERR.' from the main menu. Press the SELECT button to access the submenu.
2. If there are active errors/warnings, they will be displayed on the screen.
3. Press the INCREASE or DECREASE button to display the next error/warning message, if it exists. In the upper right corner, the number of the active error/warning is displayed, along with the total number of active errors/warnings.
5. Press the ON/OFF button to return to the previous menu.

Error/Warning Codes Troubleshooting Table

The table is provided to assist in tracking down system problems, it is not meant to take the place of good troubleshooting practices.

Table 2. Error/Warning Codes

Accumax Display Controller Errors and Warnings			
Code	**Message**	**Description/Cause**	**Corrective Actions**
E0001	NO DATA	Data cable unplugged. Wiring issue. Missing CAN network terminator. Other hardware not powered or failed.	Check network connections. Check/install terminators if missing. Contact manufacturer.
E0010 E0011 E0012	SOFTWARE DRIVER FAILED INTERNAL ERROR	Unit encountered internal error	Restart unit. Check for latest firmware updates. Contact manufacturer.
W0020	HIGH TEMP WARNING	High temperature inside of the unit	Unit will operate normally. Action will be required if temperature continues to rise.
W0021	UNIT TOO HOT!!!	Internal temperature reaching thermal shutdown level.	Reduce heat exposure
Accumax Network Assembly Errors and Warnings			
E0403	NO INJECTOR	Injector not detected. Injector not paired. Injector not powered. Injector cable disconnected. Injector hardware issue.	Pair injector. Check wiring and power to injector. Contact factory.
E0404	NETWORK CONFLICT	Multiple injectors with the same ID on the network.	Pair injector.
E0405	NO LOW-FLOW	Low-Flow hardware not detected. Low-Flow not paired yet. Low-Flow not powered. Low-Flow cable disconnected. Low-Flow hardware issue.	Pair Low-Flow. Check wiring and power to Low-Flow. Contact factory.
E0406	NETWORK CONFLICT	Multiple low-flow hardware in the same Group on the network.	Pair Low-Flow.
E0407	NO HYD. CONTROLLER	Hydraulic Controller hardware not detected. Hydraulic Controller not paired. Hydraulic Controller not powered. Hydraulic Controller cable disconnected. Hydraulic Controller hardware issue.	Pair Hydraulic Controller. Check wiring and power to Hydraulic Controller. Contact factory.
E0408	NETWORK CONFLICT	Multiple Hydraulic Controllers hardware in the same Group on the network.	Pair Hydraulic Controller.
Accumax Injector Assembly Errors and Warnings			
E0430	INJ. PRESS. SENSOR	Injector assembly pressure sensor failed or disconnected.	Check if sensor is installed and plugged in. Check pressure sensor wiring. Replace pressure sensor.
E0431	INJ. HARDWARE CAL.	Injector assembly calibration issue. Calibration incorrect or not performed.	Recalibrate foam flow on this injector assembly.
E0432	INJ. HDW. OVERCURRENT	Injector assembly hardware overcurrent detected.	Inspect injector assembly metering valve for foreign objects. Flush injector. Contact factory if issue persists.
E0433	INJ. HDW. ENCODER	Injector assembly hardware issue. Position encoder issue.	Injector assembly internal issue contact factory.
E0434	INJ. HDW. STALL	Injector assembly motor stall. detected.	Check if injector assembly has sufficient power to operate. Reset power. Check if all cables are securely connected. If problem persists, contact factory.

(Continued Table 2. Error/ Warnings Codes and Troubleshooting)

Accumax Display Controller Errors and Warnings			
Code	**Message**	**Description/Cause**	**Corrective Actions**
E0435	INJ. INT. CIRCUIT	Injector assembly internal circuit issue.	Contact factory.
E0436	INJ. FOAM METER	Injector assembly foam flow meter issue.	Check if foam flow meter cable is plugged in. Check if red light on flow meter connector is ON. Contact factory for replacement
W0437	INJ. CAPACITY LIMIT	Injector assembly foam output at max. Demand exceeds capacity.	Reduce demand. To maintain set foam percentage reduce water flow for that line.
Accumax Low-Flow Errors and Warnings			
E0450	L.F. PRESS. SENSOR	Foam manifold pressure sensor failed or disconnected.	Check if sensor is installed and plugged in. Check pressure sensor wiring. Replace pressure sensor.
E0451	L.F. HARDWARE CAL.	Low-Flow assembly hardware calibration issue.	Recalibrate foam flow on Low-Flow assembly.
E0452	L.F. HDW. OVERCURRENT	Low-Flow assembly hardware overcurrent detected.	Inspect low-flow assembly metering valve for foreign objects. Flush system. Contact factory if issue persists.
E0453	L.F. HDW. ENCODER	Low-Flow assembly hardware	Low-flow assembly internal issue
E0454	L.F. HDW. STALL	Low-Flow assembly motor stall detected.	Check if low-flow assembly has sufficient power to operate. Reset power. Check if all of low-flow assembly cables are securely connected. If problem persists, contact factory.
E0455	L.F. INT. CIRCUIT	Low-Flow assembly internal circuit issue.	Low-flow assembly internal issue, contact factory.
E0456	L.F. FOAM METER	Low-Flow assembly foam flow meter issue.	Check if foam flow meter cable is plugged in. Check if red light on flow meter connector is ON. Contact factory for replacement.
W0457	L.F. CAPACITY LIMIT	Low-Flow assembly foam flow at max.	Recalibrate foam flow on low-flow assembly. Contact factory if issue persists.
Accumax Hydraulic-Controller Errors and Warnings			
E0460	SYS. MAIN FOAM FLOW	System main foam flow meter failed or disconnected.	Inspect flow meter cable for damage. Check if foam flow meter cable is plugged in to meter and to low-flow assembly. Contact factory for replacement.
E0461	SYS. HYDRAULIC DRIVER	System Hydraulic driver issue.	Check hydraulic control cable. Check connections. Make sure PTO is engaged to operate foam pump. Check if hydraulic system is operating correctly.
W0462	SYS. LOW FOAM	Foam supply in tank low.	Switch to off-board supply. Refill tank.
W0463	SYS. FOAM PRESS HIGH	System foam manifold pressure high!	Check foam flow calibration of system components. Check foam lines for obstructions.
W0464	SYS. BACKUP CNTL ACT.	System switched to backup hydraulic controller.	Main hydraulic controller board may be defective. Contact factory.
E0465	SYS. FOAM CALIBRATION	Foam flow mismatch detected.	Check foam calibration. Check foam flow meters. Check for foam leaks.
E0465	SYS. FOAM CALIBRATION	Foam flow mismatch detected.	Check foam calibration. Check foam flow meters. Check for foam leaks.
E0466	SYS. FOAM VALVE LEAK	Foam flow detected with valves closed.	Check for foam line for leaks. Recalibrate metering valve. Contact factory.

(Continued Table 2. Error/ Warnings Codes and Troubleshooting)

Accumax Display Controller Errors and Warnings			
Code	**Message**	**Description/Cause**	**Corrective Actions**
W0467	SYS. NO FOAM SHUTDOWN	System was shut down due to lack off foam.	Reestablish foam supply. Turn Foam On to resume operation.
W0470	SYS. CAPACITY LIMIT	System foam output at max.	Demand exceeds system capacity. Decrease demand for foam by reducing water flow on some lines or closing one of the lines. Foam may be lean when this message is displayed.
W0471	SYS. NO FOAM DETECTED	System no foam flow detected. Foam pump is running dry. No-foam shutdown timer started. System will shutdown after timer elapses and no foam is delivered to the system.	Current foam supply is empty. Connect new foam supply. Run pump until foam starts flowing again.
Accumax Water Valve Errors and Warnings – Accumax Fusion Only			
E0003	NO VALVE	Water valve was not paired yet. Water Valve data cable disconnected. Defective valve actuator. Water Valve not powered. Wiring issue.	Pair valve with controller. Check data wiring and power to valve.
E0004	NETWORK CONFLICT	More than 1 valve with the same Network ID. New valve was added to network with ID that already existed. Valve Controller ID was not assigned (is set to 0).	For new installation: complete pairing process for all controllers. Pair valve if it was replaced/ serviced.
E0205	VALVE PRES. SENS.	Pressure sensor signal outside of range. Pressure sensor is unplugged or not installed on this valve. Pressure sensor wiring issue.	Check if sensor is installed and plugged in. Check pressure sensor. Check pressure sensor wiring.
E0210	VALVE OVERCURRENT	Valve overcurrent while closing. Mechanical obstruction or debris inside valve. Valve position must be calibrated. Valve actuator requires lubrication. Electric motor problem.	Check valve for any object that may prevent it from closing. Calibrate valve. Lubricate Valve Actuator. Check electric motor.
E0211	VALVE OVERCURRENT	Valve overcurrent while opening. Mechanical obstruction or debris inside of valve. Valve position must be calibrated. Valve actuator requires lubrication. Electric motor problem.	Check valve for object that may prevent it from opening. Calibrate valve. Lubricate actuator. Check electric motor.
E0212	VALVE HIGH CURRENT	Valve draws high current. Mechanical obstruction or debris inside valve. Valve actuator requires lubrication. Electric motor problem.	Check valve for object that may prevent it from opening. Lubricate actuator. Check electric motor.
E0213	VALVE POS. SENS. FAIL	Valve position sensor failed. Normal current. Internal issue with actuator.	Contact manufacturer. Replace actuator.
E0214	VALVE POS. SENS. FAIL	Valve position sensor failed. Motor stalled. Internal issue with actuator. Electric motor is unplugged or has issues.	Contact manufacturer. Replace actuator. Replace motor.
E0215	VALVE POS. SENS. FAIL	Valve position sensor failed. High current. Valve jammed. Internal issue with actuator. Short in wiring. Electric motor issue.	Inspect valve for foreign objects. Contact manufacturer. Replace actuator. Replace motor
E0220	VALVE NO MOTION	Valve does not move. Normal current. Insufficient current to drive valve. Internal issue with actuator. Mechanical damage to valve.	Check valve power and wiring. Inspect valve for foreign objects. Contact manufacturer. Replace actuator.

(Continued Table 2. Error/ Warnings Codes and Troubleshooting)

Accumax Display Controller Errors and Warnings			
Code	**Message**	**Description/Cause**	**Corrective Actions**
E0221	VALVE NO MOTION	Valve does not move. High current. Internal issue with actuator. Electric motor is unplugged or has issues.	Check motor wiring, observe if it drives valve. Contact manufacturer. Replace actuator. Replace motor.
E0222	VALVE NO MOTION	Valve does not move. High current. Obstruction, foreign object in the valve. Valve jammed. Internal issue with actuator. Short in wiring. Electric motor issue.	Inspect valve for foreign objects. Contact manufacturer. Replace actuator. Replace motor.
E0223	VALVE MOTOR STALLED	Insufficient current to drive valve. Electric motor is unplugged or has issues.	Check valve power and wiring. Inspect valve for foreign objects. Contact manufacturer.

Update Remote Device Firmware (Hardware Components)

The display module can be used to update the firmware of the hardware components over the CAN Bus connection. Hardware components that can be updated include: injectors, hydraulic controllers, low-flow option and water valve. The manufacturer will provide an firmware update file when needed. This file should be copied to a USB device into the "SF"directory (folder), and create the "SF" directory (folder) if it does not exist.

1. On the back of the unit, remove the USB access port cap located next to the wiring connector. Twist the cap *counterclockwise* to open it. Insert the USB device into the USB connector.
2. Select 'FACTORY' on the main menu. Press the SELECT button to access the submenu.
3. Select 'FIRMWARE UPDATE. Press the SELECT button to access the submenu.
4. Select 'UPDATE REMOTE DEVICE. Press the SELECT button to access the firmware file list.

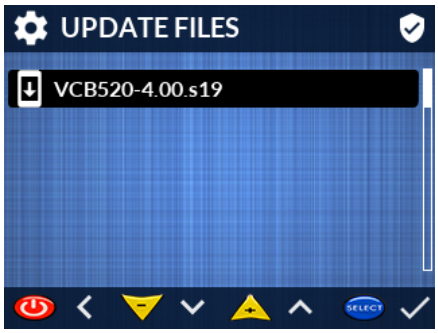

5. Press the INCREASE or DECREASE button to select the firmware file that was copied onto the USB device. Press the SELECT button to display the list of compatible devices.
6. Press the INCREASE or DECREASE button to select the device to be updated. Devices are identified by their serial numbers and the current firmware version. Press the SELECT button to start the update process. When the dialog box appears, press the SELECT button to proceed with the update, or the ON/OFF button to cancel the process.

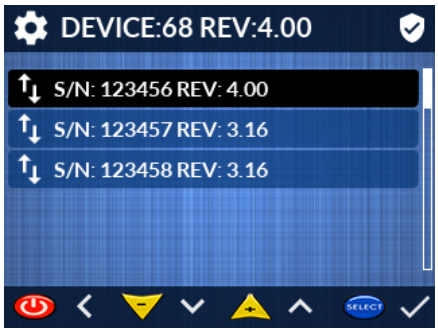

7. Once the update has started, a progress bar will be displayed.

   NOTE: Do not disconnect power from the valve controller or the valve.
8. After the firmware update has been completed, a confirmation dialog box will be displayed. Press the SELECT button to return the list of compatible devices.
9. If any other devices need to be updated, repeat steps 6-8.
10. If no additional updates are needed, remove USB device from the unit and replace the USB access port cap.

12. CALIBRATION & TESTING

Calibration Procedure Instructions

The Foam Pro AccuMax foam proportioning system relies on sensor readings to control the injection rate of the foam concentrate into the water stream and for the other system functions. Proper calibration ensures that the system produces an accurate foam solution and maintains the proper and safe level of foam flow and pressure in its pump and the other components. During the calibration process, readings from an external reference device will be used to determine the actual water flow or foam volume discharged. This data will be entered into the system and saved.

Calibration data is stored in the internal non-volatile memory of the hydraulic controller and foam-line-injector assemblies. For MAX200 models, which use Elkhart electric water valves, the valve position should also be calibrated.

WARNING

- Before attempting calibration, make sure the system was correctly installed and configured.

CAUTION

- AccuMax system components can be calibrated in Metric or Imperial units of measure. It is essential to use the same unit of measure system throughout the calibration process. Once calibration is complete, units of measure can be changed without affecting calibration.

AccuMax Devices and Sensors That Require Calibration:

- Master Foam Flow Meter: measures total foam flow produced by foam pump
- Low-Flow Foam Flow Meter: measures foam flow of foam redirected back to foam pump when low-flow function is active.
- Foam-Line-Injector(s) Foam Flow Meter: measures foam flow delivered to injection point (discharge).
- Water Flowmeter (supply data to FLI): measures water flow through discharge to which foam is being injected.
- Fusion System Only -- Electric Water Valve Position on a MAX200: determines water valve position.

Other Auxiliary Devices:

- TankVision Pro Foam Tank Level Meter: measures volume of foam remaining in foam tank
- External water flow device: capable of measuring water flow (i.e. APEX valve) that is used instead of foam-line-injector water flow sensor
- Auxiliary Foam Function Devices: for calibration of auxiliary function devices, refer to Chapter #18 or supplemental information manuals.

Equipment Required for Calibration

The Foam Pro AccuMax system calibration is conducted using the menu system available on Fury and Fusion Displays. Depending on which device and what type of calibration will be performed, additional equipment will be required that is not provided with your system.

<u>For Water Flowmeter Calibration</u>:

- Water flowmeter: accurate external water flowmeter that is capable of measuring flow rates specified for discharge being calibrated.

- Final installer provided: hoses and fittings are required for external flowmeter connections and water discharge or recirculation.
- Flowmeter with volume measurement capability, such as provided in the in the AccuMax Calibration Kit (P/N: 3430-0381)

- Final installer provided: container marked for volume, using a container to ensure that it has enough volume capacity (300G/1000L) to calibrate at least one line. Or, use a scale that measures the weight of material pumped, in order to calculate its volume.
- Final installer provided: hoses and fittings to allow foam flow from the calibration valve and manifold to an external meter or container or foam tank.

Foam System Calibration Procedures

The FoamPro AccuMax II system must be calibrated during initial installation and after major repairs or change in the foam system. The calibration process allows electronic adjustments to the Fury, Fusion, and APEX displays, water flowmeters, foam flowmeters, foam line injection assemblies, and low-flow bypass assembly. FoamPro systems can be calibrated to any unit of measure, i.e., U.S., Metric, Imperial, etc. It is necessary to use the same unit of measure throughout the calibration process to ensure proper proportioning by the system.

During the calibration process, the foam concentrate tank shall be filled with water for test purposes. Calibration can be accomplished by using a calibrated external flowmeter, such as provided in the AccuMax Calibration Kit (part number #3430-0381) or by pumping into a container that is marked for volume or by using the weight of the water pumped. In the case of using a container, ensure that it has enough volume capacity to at least calibrate one (1) foam-line-injector assembly. It is recommended to use a container that is at least 300 gallons (1140 liters).

Master Foam Flowmeter, Low-Flow Bypass Flowmeter, and Foam-Line-Injection Calibration

It is important to accurately calibrate the master foam flowmeter, FLI assemblies, and low-end bypass foam flowmeters must be calibrated to the master flowmeter to ensure the foam system will operate correctly.

CAUTION

- It is recommended when calibrating the all foam flowmeters to run a small volume of fluid, approximately 25 gallons/95 liters for the first run to make any large adjustments. The second run should be for at least 50 gallons/190 liters to start to get the calibration closer. The third and every run after should be for at least 100 gallons/379 liters until the differential between the Master flowmeter and the FLI shall be within at least ½ gallon/1.9 liters.
- Foam pumps and foam systems are tested and calibrated with water (in place of foam concentrate) due to cost and foam disposal or collection. The viscosity of various foam concentrates may affect the amount of foam concentrate that is injected into the water stream. When various viscosity foam concentrates are used, the actual concentrate injection may vary by as much as 15%. It is suggested that the end-user secure a listing of all foam concentrate manufacturers, their products, percentage, and viscosity.
- The end-user may specify the foam system be tested with a specific foam concentrate, which would be supplied by the end-user or final installer.
- When foam system is installed and calibrated by the final installer, the end-user may wish to adjust the default foam concentrate injection rate and/or 'simulated flow rate' to their special needs. These changes can be made without altering the calibration by using the procedures described for those functions only in this manual.

Water Flowmeter Calibration

It is critical that an accurate flow measuring device be used to measure water flow to calibrate all water flowmeter(s). Use a suitable size smooth bore nozzle and an accurate pitot gauge instrument. Determine the water flow normally expected from that discharge outlet.

For example: 2.5" discharge -- establish a flow of 250GPM (937LPM) of water through a nozzle and measure flow with a pitot gauge.

For example: 4" monitor – establish a flow of 1250GPM (4687LPM) of water through the straight-bore tip and measure flow with a pitot gauge. Refer to NFPA #1901 or Elkhart Brass catalog or other resources to secure standard flow charts, pitot pressure, and tip sizes.

Foam Concentrate Container

300 gallons (1140 liters) Final installer or end-user supplied

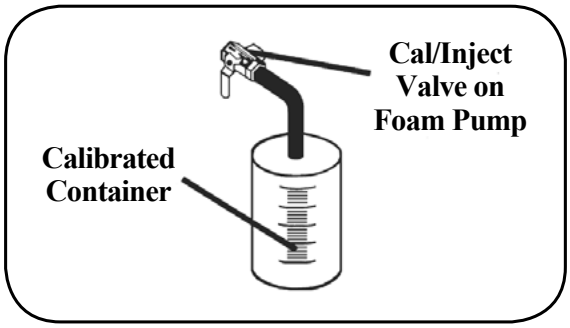

Table 3. Calibration Requirements

Calibrate						
Code	**Scenario**	**Master Foam Flow**	**Low-Flow Foam Flow**	**Injector(s) Foam Flow**	**Injector(s) Water Flow**	**Water Valve Position**
1	After system installation	Yes	Yes	All Injectors	All Injectors	All Valves
2	Master foam flow meter is replaced	Yes	Yes	All Injectors	—	—
3	Low-flow line assembly is replaced	Yes	Yes	All Injectors	—	—
4	Master foam flow meter is recalibrated	—	Yes	All Injectors	—	—
5	Injector assembly is replaced	—	—	Injector	Injector	—
6	Water valve is replaced (MAX200 Fusion)	—	—	Injector	—	—
7	Foam flow meter is replaced in Injector assembly	—	—	—	—	Valve
8	Water flow sensor is replaced, serviced or cleaned.	—	—	—	Injector	—
9	Water flow sensor location or mount moved or orientation changed. Plumbing size changed.	—	—	—	Injector	—
10	Low-Flow assembly foam flow meter is replaced	—	Yes	—	—	—
11	System produces too rich / too lean foam on all discharges	Yes	Yes	All Injectors	All Injectors	—
12	Foam produced on specific discharge too rich / too lean	—	—	Injector	Injector	—
13	Displayed water flow inaccurate	—	—	—	Injector	—
14	Water valve does not close / open fully, hits mechanical stops or reports overcurrent (MAX200 Fusion)	—	—	—	—	Valve
15	Water valve does not move (MAX200 Fusion). Check valve type setting and calibrate.	—	—	—	—	Valve
16	Any calibration process fails	Troubleshoot and repeat calibration				
17	Display Module added/replaced/serviced	No calibration needed				
18	Hydraulic Controller replaced/serviced					
19	Wiring serviced or replaced					
20	Foam Pump replaced or serviced					
21	Firmware updated on any of system components	No calibration needed (unless update note states otherwise)				

Order of Calibration Process

Calibration process can be divided into two groups:

- Water Flow Calibrations for each water flow meter in system
- Foam Flow Calibrations for master flow meter, low-flow line and injectors

Each calibration group can be performed independently of the other and in any order.

Water Flow Calibration Requirements

The process will require running water pump and operating water valves, along with moving hose connections from each water outlet to an external flow metering device. Calibration of water flow meters must be done for each discharge and can be done in any order.

NOTE: If the system is equipped with Fusion Displays, associated water valve position <u>needs to be calibrated before</u> water flow calibration. Follow instructions for Water Valve Calibration.

Water Flow Calibration Injector Process

In order to conduct water flow calibration, an external reference flowmeter shall be connected to the discharge being calibrated. Actual water flowing out of that discharge will be measured by a reference meter. This reading will be entered as a calibration data point into the system.

1. **Single Point Calibration:** In most installations, only one data point is needed for water flow calibration. During single point water flow calibration, use typical flow rate that would be used for this discharge during firefighting.
2. **Multi-Point Calibration:** In case accurate water flow measurements are not possible to achieve with single point calibration, additional data point(s) can be added for different flow rates during the calibration process. A maximum of (9) nine data points can be added. Flow rates used for each data point must be varied from those already entered by at least 5%. An invalid data point will be rejected.

Before calibration can start, make sure all hose connections are secure and without restrictions and bends. Assure water has a safe way to discharge out of the equipment or is looped back to the water supply. Engage and run the water pump at a pressure that does not exceed the pressure rating of any component in use.

1. In the main menu select MAINTENANCE item by pressing INCREASE or DECREASE buttons. Press SELECT button to access the submenu.
2. In MAINTENANCE submenu select the 'WATER FL. CAL. INJ.' item using the INCREASE or DECREASE button. Press the SELECT button to start water flow calibration process.
3. Warning dialog will be displayed press SELECT button to continue.
4. Calibration screen will open:

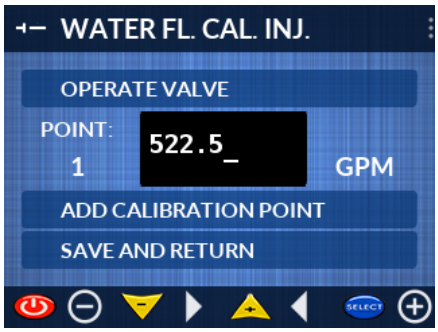

5. Operate water valve to establish water flow rate to be used for calibration.

   NOTE: For Fusion MAX200 models with water valve control. To operate water valve, press INCREASE or DECREASE buttons until 'OPERATE VALVE' item is selected. Use SELECT or ON/OFF buttons to move valve toward open or close position as needed.

6. Observe water flow rate on an external flow meter. Wait for the flow reading to stabilize if necessary. Take a reading of the actual water flow on an external meter.

7. Select the data point value entry field by pressing the INCREASE or DECREASE buttons.

8. When the data point value field is selected, enter an actual flow reading. Use the SELECT button to increase digit value at cursor position, ON/OFF button to decrease the digit value at the cursor position, DECREASE button to move cursor to next position to the right or the INCREASE button to previous position to the left. Decimal point can be used only once in the value field, to remove an unwanted decimal point and change it into a number.

9. When the flow rate value is entered, press the DECREASE button until 'ADD CALIBRATION POINT' item is selected on the screen. (Pressing and holding the DECREASE button will have the same effect).

10. With 'ADD CALIBRATION POINT' selected, press the SELECT button to add a calibration data point.

11. Dialog box will be displayed to confirm if a data point was accepted or rejected. Should a point get rejected, it can be entered again. Before reentering, check if the water sensor is properly connected and make sure the entered value is not too close to the point already entered.

12. For a single point calibration proceed to next step 13. For a multi-point calibration repeat steps 5 through 11 with different water flow rates for each entered point.

13. Press the DECREASE button until the 'SAVE AND RETURN' item is selected. Press the SELECT button to save new calibration data.

14. Dialog box will be displayed to confirm if the calibration was successfully completed. If the calibration fails, it will need to be repeated.

    NOTE: the calibration can be canceled at any time by selecting the 'SAVE AND RETURN' item and pressing the ON/OFF button. Previous calibration data will be restored.

Foam Flow Calibration Requirements

During foam flow meters calibrations, the volume of liquid will be flowed through the components of the system and measured. The measured volume will be then used as reference value for the remaining foam flow meters calibration. This process will require running the hydraulic system, foam pump and injectors. The following additional equipment is required: flowmeter device with capability of measuring liquid volume, in line valve to set back-pressure and hoses required for connections. FoamPro offers a calibration kit P/N: 3430-0381 that features a flowmeter and back-pressure control valve. Access to foam calibration valves will be required. Calibration can be done using water instead of foam concentrate.

1) Master Foam Flow Meter – this calibration is performed only once for the entire system. Follow instructions for Master Foam Meter Calibration

2) Foam Flow Meter for each Injector – follow instructions for Injector Foam Flow Meter Calibration

3) Low-Flow Foam Flow Meter - this calibration is performed only once for the entire system. Follow instructions for Injector Foam Flow Meter Calibration.

Master Foam Flow Meter Calibration

Master Foam Flow Meter the measures the total foam flow output of the foam pump. Calibration of the meter is done by measuring volume of liquid discharged by system with an external volume meter or by collecting this liquid to graduated containers to determine the total volume. FoamPro recommends calibration kit P/N: 3430-0381 for convenient and accurate foam calibration.

This calibration need to be performed first before any injector foam flow meters calibrations are done. Master Foam Flowmeter will be used as reference device for injector foam flow meters calibrations.

To perform this calibration the operator needs to:

1. Make sure all display modules are showing the "OFF" state
2. Select the discharge equipped with the foam injector and corresponding display module. It is recommended to select the larger size discharge for this process, if possible.
3. Locate foam calibration valve associated with injector connected to an external volume meter to calibration valve (*if the installation has a foam calibration manifold attached to an external volume meter to discharge side of manifold*).
4. Connect the return hose to safely discharge liquid or to return it to the foam supply line or foam tank.
5. Turn the calibration valve in the 'Calibration' position. Flow will now be directed out of the injector assembly through an external volume meter.
6. Make sure the hydraulic system is running and PTO is engaged.
7. Using this discharge display module, the open main menu.
8. In the main menu, select the MAINTENANCE item by pressing INCREASE or DECREASE buttons. Press the SELECT button to access the submenu.
9. In the MAINTENANCE submenu select the 'FOAM CAL. MASTER' item using the INCREASE or DECREASE button. Press the SELECT button to start the Master foam flow calibration process.
10. Warning dialog box will be displayed; press SELECT button to continue.
11. Calibration screen will open:

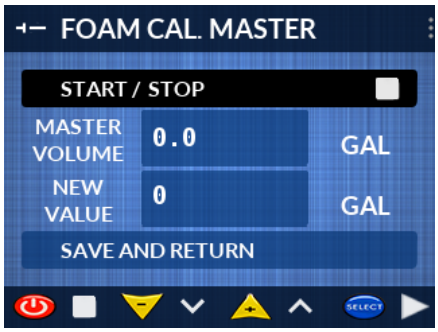

12. Reset the external volume meter to read 0. Make sure the unit of measure for the reference meter matches the unit of measure displayed on the screen.
13. 'START / STOP' item should be selected on the screen. If it is not, then use the INCREASE or DECREASE button to select it.
14. Press the SELECT button to start measured flow. Icon on the right side of 'START / STOP' item should change to ▶ indicating system is getting ready to run. After several seconds, the foam pump will engage and flow will be observed.
15. Once flow starts, set the back-pressure in the line to approx. 50 psi/340 kPa/3.4 BAR. If using calibration kit 3430-0381, this can be achieved by partially closing the valve provided in the assembly until the gauge reading reaches the desired back-pressure.
16. Let the system run until a substantial volume has been accumulated. The larger the volume, the more accurate the calibration will be. If needed, the flow can be stopped and resumed using respectively SELECT and ON/OFF buttons. Each time flow is stopped or resumed icon on the right side of 'START / STOP' item will indicate so. Note it may take up to 15s to stop or resume flow.

17. When sufficient volume has been accumulated, press the ON/OFF button to stop flow. It may take up to 15s to stop the flow and close all valves. When the system has stopped, the icon on the right side of the 'START / STOP' item will change to ■.

18. Record the actual total volume accumulated on an external meter.

19. Select 'NEW VALUE' entry field by pressing the INCREASE or DECREASE buttons.

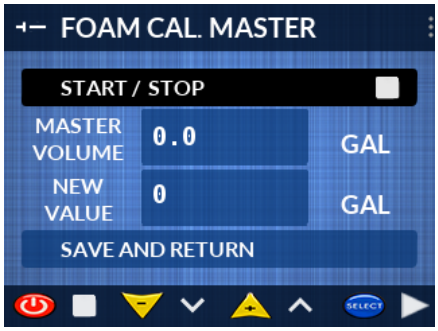

20. When 'NEW VALUE' value field is selected, enter the recorded volume. Use the SELECT button to increase the digit value at the cursor position, the ON/OFF button to decrease the digit value at the cursor position, DECREASE button to move cursor to next position to the right or the INCREASE button to move the cursor to previous the position to the left. Decimal point can be used only once in the value field, to remove an unwanted decimal point and change it to a number.

21. When the new value is entered, press the DECREASE button until the 'SAVE AND RETURN' item is selected on the screen. (Pressing and holding the DECREASE button will have the same effect).

22. Press the SELECT button to save the new calibration data.

23. Dialog box will be displayed to confirm that the calibration was successfully completed. If the calibration fails, it will need to be repeated.

24. Depressurize and disconnect an external meter from the calibration valve or calibration manifold.

25. Switch the calibration valve back to normal position, to direct foam flow into the water way.

Injector Foam Flow Calibration

Injector Foam Flow Meter measures the flow of foam concentrate injected the into water stream flowing through the corresponding discharge. Calibration of the meter is done by comparing the volume of liquid measured by the master foam flowmeter and one discharge from an injector. Calibration can be done using water instead of foam concentrate.

ATTENTION: Do not calibrate the Injector Foam Flow Meter, if the Master Foam Flow meter is not calibrated. The Master Foam Meter must have an accurate calibration before the injectors can be calibrated.

This calibration must to be performed for all injectors' foam flowmeters in newly installed into the system. Injector Foam Flowmeters can be calibrated in any order.

To perform this calibration the operator needs to:

1. Make sure all display modules show OFF state.

2. Select the discharge/foam injector to be calibrated and its corresponding display module.

3. Locate the foam calibration valve associated with an injector connected hose to direct flow back to the foam supply or foam tank. FoamPro calibration kit P/N: 3430-0381 can be used in line with the hose to control back-pressure during this calibration (*if the installation has a foam calibration manifold attached to an external hose to the discharge side of manifold*).

4. Turn the calibration valve into the 'Calibration' position.

5. Make sure the hydraulic system is running and PTO is engaged.
6. Using the display module, open the main menu.
7. In the main menu select MAINTENANCE item by pressing INCREASE or DECREASE buttons. Press SELECT button to access the submenu.
8. In the MAINTENANCE submenu select the 'FOAM CAL. INJ.' item using the INCREASE or DECREASE button. Press the SELECT button to start Injector foam flow calibration process.
9. Warning dialog box will be displayed; press SELECT button to continue.
10. Calibration screen will open:

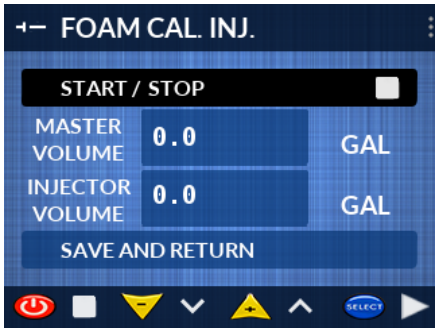

11. 'START / STOP' item should be selected on the screen. If it is not, then use the INCREASE or DECREASE buttons to select it.
12. Press the SELECT button to start measured flow. The icon on the right side of the 'START / STOP' item should change to ▶ indicating the system is getting ready to run. After several seconds, the foam pump will engage and flow will be observed.
13. Once the flow starts, set the back-pressure in the line to approx. 50psi / 340kPa / 3.4 Bar. If the calibration kit 3430-0381 is being used, this can be achieved by partially closing valve provided in the assembly until the gauge reading reaches desired the back-pressure.
14. Let the system run until a substantial volume is accumulated, displayed as 'MASTER VOLUME'. The larger the volume the more accurate calibration will be. If needed, the flow can be stopped and resumed using the SELECT and ON/OFF buttons respectively. Each time the flow is stopped or resumed icon on the right side of 'START / STOP' item will indicate so. Note it may take up to 15 seconds to stop or resume flow.
15. When sufficient volume has been accumulated, press ON/OFF button to stop flow. It may take up to 15 seconds to stop flow and close all valves. When the system has stopped, the icon on the right side of 'START / STOP' item will change to ■.
16. Values for 'MASTER VOLUME' and 'INJECTOR VOLUME' will be displayed.

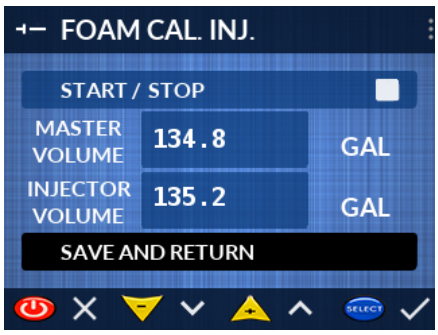

17. Press the DECREASE button to select the 'SAVE AND RETURN' item on the screen.
18. Press the SELECT button to update the injector foam flow calibration. Injector foam flowmeter calibration data will be automatically recalculated and updated to match master the flow meter reading.

19. Dialog box will be displayed to confirm that the calibration was successfully completed. If the calibration fails, it will need to be repeated.
20. Depressurize and disconnect the hoses from the calibration valve.
21. Switch the calibration valve back to normal position to direct the foam flow into the water way.

Low-Flow Foam Flow Calibration

Low-Flow Foam Flowmeter measures the flow of foam concentrate circulated back to the foam pump inlet when low-flow is in use. Calibration of the meter is done by comparing volume of liquid measured by master foam flowmeter and one flown through low-flow recirculation. Calibration can be done using water instead of foam concentrate.

ATTENTION: Do not calibrate the Injector Foam Flow Meter, if the Master Foam Flow meter is not calibrated. The Master Foam Meter must have an accurate calibration before the injectors can be calibrated.

To perform this calibration operator needs to:

1. Make sure all display modules show OFF state.
2. Make sure the hydraulic system is running and PTO is engaged.
3. Using any AccuMax display module open main menu.
4. In main menu select MAINTENANCE item by pressing INCREASE or DECREASE buttons. Press SELECT button to access the submenu.
5. In MAINTENANCE submenu select the 'FOAM CAL. L-FLOW.' item using the INCREASE or DECREASE button. Press the SELECT button to start Low-flow foam calibration process.
6. Warning dialog box will be displayed; press SELECT button to continue.
7. Calibration screen will open:

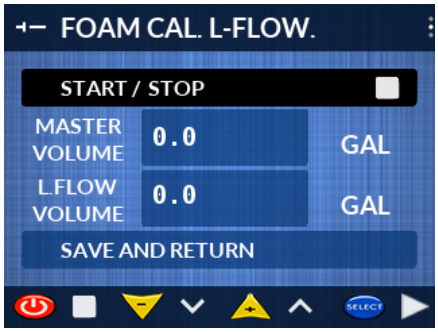

8. ‘START / STOP’ item should be selected on the screen. If it is not use INCREASE or DECREASE buttons to select it.
9. Press SELECT button to start measured flow. The icon on the right side of ‘START / STOP’ item will change to ▶ indicating system is getting ready to run. After several seconds, the foam pump will engage and the low-flow recirculation line will be open.
10. Let the system run until a substantial volume is accumulated, displayed as ‘MASTER VOLUME’. The larger the volume the more accurate calibration will be.
11. When a sufficient volume is accumulated, press the ON/OFF button to stop flow. It may take up to 15 seconds to stop flow and close all valves. When the system has stopped, the icon on the right side of the ‘START / STOP’ item will change to ■.

12. Values for the ‘MASTER VOLUME’ and ‘L. FLOW VOLUME’ will be displayed.

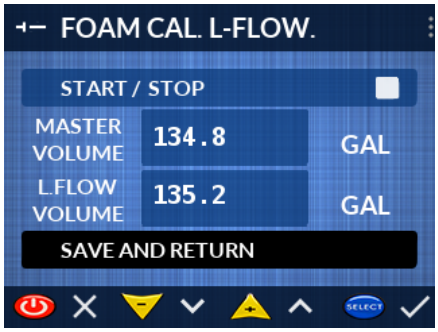

13. Press the DECREASE button to select the ‘SAVE AND RETURN’ item on the screen.
14. Press the SELECT button to update low-flow foam flow calibration. Calibration data will be automatically recalculated and updated to match the master flowmeter reading.
15. Dialog box will be displayed to confirm that the calibration was successfully completed. If the calibration fails, it will need to be repeated.

Valve Position Calibration (for MAX200 Fusion models only)

The valve position calibration determines the point where the valve is fully open or fully closed. This process will automatically determine these points by running the valve to fully open position until it hits the mechanical stop, and then rotating back to the fully closed position until it reaches mechanical stop. This calibration must be done after installation, when the actuator has been replaced, or in any case when valve doesn't fully close or fully open, or when the valve polarity setting has been changed.

Valve Calibration

1. Select the MAINTENANCE item in the main menu. Press the SELECT button to access this menu.
2. Select the 'VALVE CALIBRATION.' submenu item. Enter this submenu using the SELECT button.
3. A warning dialog box will appear. Press the SELECT button to proceed with the valve calibration.

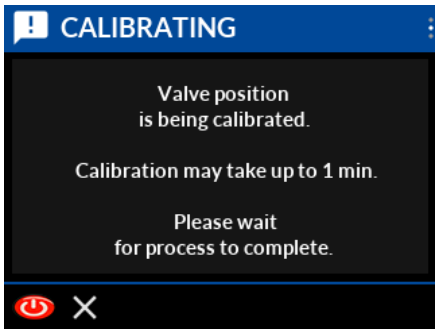

NOTE: The valve will move to fully open and fully closed positions during the calibration. When the calibration is finished, the confirmation dialog box will appear to show this action was successful.

Depending on the valve type and size, the calibration process might take up to one minute.

Water Pressure Calibration (for MAX200 Fusion models only)

Pressure calibration is not typically required; the unit is normally factory calibrated. If the pressure reading is substantially different from the actual pressure, please confirm that the sensor is not defective. In the event the pressure reading is off by a small amount, the unit can be recalibrated. Before this process begins, connect an external pressure meter to the discharge controlled by the valve under calibration.

Pressure Calibration

1. Select the MAINTENANCE item in the main menu. Press the SELECT button to access this menu.
2. Select the 'PRESS. CALIBRATION.' submenu item. Enter this submenu using the SELECT button.
3. A warning dialog box will appear. Press the SELECT button to proceed with the pressure calibration. **NOTE: Starting calibration process will erase all existing calibration data. Pressure calibration requires two calibration points.**
4. When the pressure calibration screen is displayed, ensure that 'OPERATE VALVE' item is selected. If not, then press the INCREASE or DECREASE button until this item is selected.
5. Press the SELECT button to open the valve. Make sure the system is not pressurized. Reference pressure meter should read 0.
6. Press the INCREASE or DECREASE button to move to the pressure value field. If the value in the field is other than 0, use the SELECT button to increase the digit at the cursor position. Use the ON/OFF button to decrease the digit at the cursor position. Use the INCREASE or DECREASE button to move the cursor to the next position. If the value is 0, move on to step 7.

7. Press the INCREASE or DECREASE button until 'ADD CALIBRATION POINT' has been selected. Press the SELECT button to add this data as a calibration point. A confirmation dialog box will appear to indicate this operation was successful. Should the data entry fail, repeat the process from step 6.

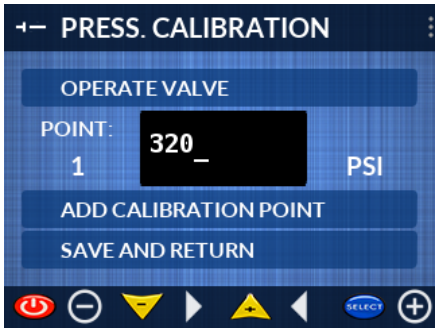

8. Pressurize the system to the highest level that can be safely achieved. Be aware of the pressure rating of all components being used for this calibration. Determine the lowest safe pressuring rating. **Under any circumstances, do not exceed this pressure rating**.

9. Press the INCREASE or DECREASE button to move to the pressure value field. Use the SELECT button to increase the digit at the cursor position. Use the ON/OFF button to decrease the digit at the cursor position. Use the INCREASE or DECREASE button to move the cursor to the next position. Enter the pressure as measured by the external pressure meter.

10. When the pressure has been entered, press the INCREASE or DECREASE button until 'ADD CALIBRATION POINT' has been selected. Press the SELECT button to add this data as a calibration point. A confirmation dialog box will appear to indicate this operation was successful.

11. To finish calibration, press the INCREASE or DECREASE button until 'SAVE AND RETURN' item is selected. Press the SELECT button to save the calibration data and return to the Maintenance submenu. Or, press the ON/OFF button to cancel the calibration and restore the previous values.

    NOTE: Make sure the pressure that was built up in the system is safely relieved before disconnecting any equipment.

13. MAINTENANCE & SERVICE REQUIREMENTS

Flushing Kit Maintenance/Service

Flushing Kit Installation and Controls

No matter which Foam Pro system is supplied on both vehicle or fixed foam system installations, a foam concentrate "flushing" system shall be required. This system shall be furnished and installed by the final installer. Refer to the drawing below that outlines the plumbing, control valve, pressure regulator, check valve, strainer, and connecting hose from the flush kit to the intake-side of the foam pump piping.

The flushing of the foam system after each use is required. The water supply for "flush kit" shall be from the fire pump discharge manifold. Flushing of the foam system from the auxiliary foam concentrate intake **IS NOT** recommended for FireLion and Edwards foam pumps. On these intakes – warning labels on maximum of foam concentrate intake pressure and a pressure gauge shall be installed next to the intake valve. (Note: these items are NOT REQUIRED on Trident foam pumps).

The final installer shall provide the flushing system which shall include the following components:

1. Check valve (0.75"/20mm in size) and connected to water manifold
2. Flush valve (0.75"/20mm in size) manually controlled on the operator's panel. **Note: this valve shall be electrically operated with a Foam Pro FOAM-AUX system.**
3. Pressure regulator (0.75"/20mm in size) preset at 50 PSI/3BAR
4. Pin-line strainer (0.75"/20mm in size)
5. A flexible hose line with female swivel NPT connections (0.750" / 20mm) shall be installed from the flush kit to the foam pump intake piping, connecting BEFORE the main wye strainer.

Flush Kit

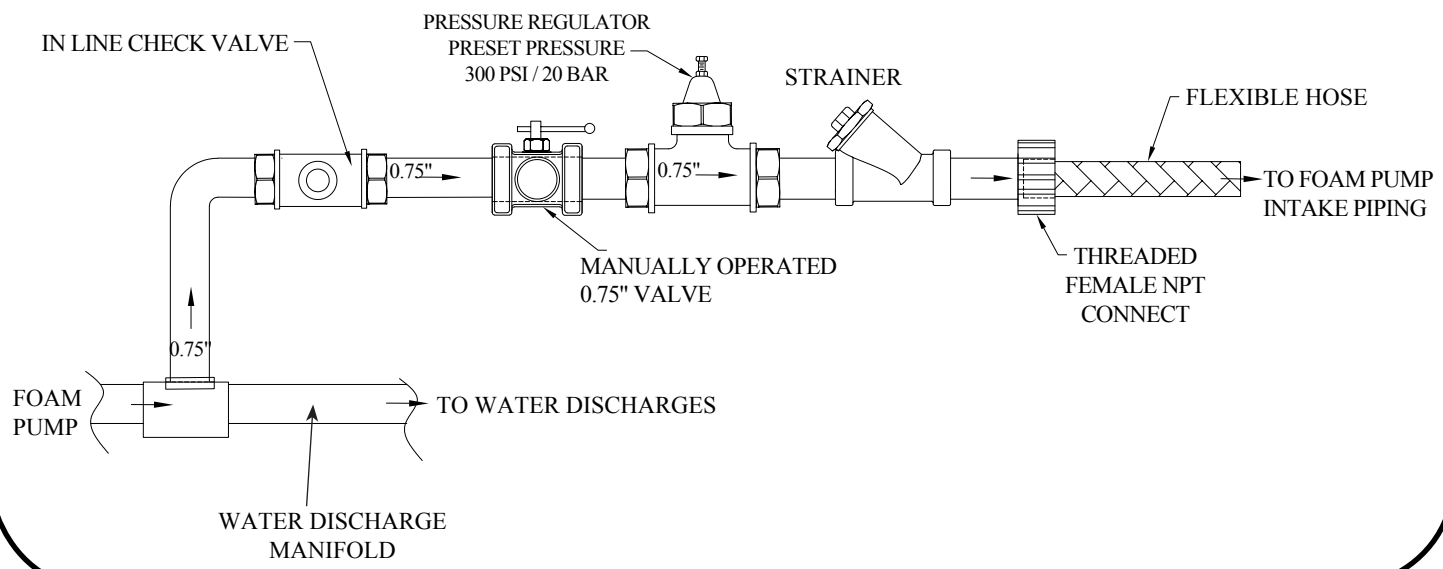

Flushing Foam Pump and Foam Plumbing System

After using any foam system, it should be flushed with fresh, potable water. The following procedure can be used for flushing the foam system:

1. Connect a potable water supply to the fire pump or the flush kit assembly inlet

2. Foam concentrate tank control valve should be in the CLOSED position (final installer valve or FOAM-AUX CONTROL).
3. Following standard fire and foam system operating manuals and procedures, start the power source, engage the fire pump, engage the hydraulic pump system PTO or power source and establish water-flow through all foam/water solution discharges.
4. Manually OPEN the flush water supply valve from fire pump discharge or outside water source (see drawing) or operate the FOAM-AUX function #3 to OPEN the electric water supply valve.
5. Turn ON the foam system (by using the Fury or Fusion display) and allow the hydraulic motor-driven foam pump to operate.
6. OPEN all foam/water discharge valves
7. Auxiliary Functions—Final Installer Supplied System:
    a) Operate the 3-way diverter valve "B" to the foam concentrate discharge outlet position
    b) Operate the 3-way diverter valve "A" to ON, which diverts flushed water to the "B" diverter valve.
8. Auxiliary Functions: Foam Pro FOAM-AUX system:
    a) FOAM-AUX display — turn on display and push Function #3 FLUSH
9. OPEN the external foam concentrate intake valve and CLOSE valve when clear water has been discharged
10. Continue to operate FLUSH SYSTEM until all water/foam discharges are flowing clear water and external foam concentrate discharge flows clear water.
11. Operate the system for 5 to 10 minutes until all foam concentrate is 'flushed' from the system.
12. To shut-down the system:
    a) Turn OFF the foam system on the display
    b) Reduce RPM on power source, disengage fire pump, and hydraulic pump system
    c) Close flush valve, or select the OFF position for the FOAM-AUX display
    d) Disconnect potable water supply to fire pump
    e) Let all water drain from discharges outlets, bleeder valves, and master fire pump drain system.
    f) Restore all discharge adapters and caps.

Foam Line Intake Strainer Cleaning

The AccuMax II foam system has a in-line strainer, installed upstream of the specified foam pump. The function of this strainer is to prevent debris or thick foam scum from entering the foam pump. The strainer requires periodic cleaning of the internal strainer. As noted in the photos below, the strainer has a removable cap or plug for access to the strainer assembly. This should be removed to wash the strainer assembly so that all debris can be cleaned out and then replaced.

The strainer should be cleaned every six (6) months, or after each major fire incident before being placed back in service.

CAUTION

- The foam strainer shall be checked and cleaned a minimum of every 6-months or after each major firefighting incident or usage.

Foam Pump Maintenance and Service

The AccuMax foam system is provided with a foam pump (Trident, FireLion, or Edwards) and each manufacturer has specific and recommended service and maintenance procedures. Including lubrication, flushing, testing, and regular scheduled inspections.

The Foam Pro part numbers (refer to Section #14 of this operating manual) for foam pumps are noted for your specific foam system installation. The GPM/LPM rating of the system relates to the specific model number from the foam pump manufacturer, which could vary from the Foam Pro part number. The foam pump manufacturers have specific service and maintenance recommendations and guidelines for each model. Please refer to the websites on the following page noting the specific foam pump manufacturer's information sources on various foam pumps.

Information pertaining to the foam pump manufacturers and engineering support information can be found on the Foam Pro website or on the website for each manufacturer:

F. Trident Emergency Products: https://tridentdirect.com/foam-products/

G. Fire Lion Global: https://www.firelionglobal.com/

H. Edwards Foam Pumps– https://www.pentair.com/en/products/fire-suppression/pentair-aurora-pumps-and-packaged-systems.html

CAUTION

- Refer to the specific foam pump manufacturer's manuals on frequency of inspections, lubrication (if applicable), and required maintenance.

CAUTION

- Drain the foam pump prior to removal from the system and close the foam tank valve.
- Routine inspection and maintenance must be performed as outlined in this Operation & Service manual.
- Only use lubricants and cleaning solvents listed in this manual for maintenance and repairs. Observe correct material handling procedures when working with lubricants and solvents.
- Slowly loosen the water and foam pressure line fittings and allow the pressure to escape. Release water and foam pressure within the system before servicing the foam and fire pump system.
- The foam concentrate liquid and foam/water solution that is “flushed” from the foam system shall be directed to a ‘safe’ foam concentrate collection location. The final installer and/or end-user shall be responsible for flushing the system.

DANGER

- Do not operate the foam pump at pressures exceeding the maximum listed operating pressure of 300 PSI [20.7 BAR].
- The safety relief valve is supplied with the foam system, do not readjust the pressure setting.
- Always disconnect the ground and positive battery cables from the battery terminals, electrical wires and control cables from the foam system and all other FoamPro equipment before electric arc welding at any point on the apparatus. Failure to do so will result in a power surge through the unit that might cause irreparable damage.
- All foam and water system flushing shall be conducted while operating through the fire pump supplied flushing system. Refer to the ‘Flushing’ section of this installation manual.

14. COMPONENT DRAWINGS & PART NUMBERS

Line Control Assembly Dimensions and Flow Capacities

STANDARD COMPONENTS -- ACCUMAX II SYSTEM			
ITEM	**Description**	**TYPE**	**Part ID**
1	Label, AccuMax II, Instruction Plaque	Label	XE-MAX1PLINST-A0A
2	Label, AccuMax II, Plumbing Schematic	Label	XE-MAX1PLPLB-A0A
3	Label, AccuMax II, 20GPM, Spec	Label	XE-MAX1PLSPC-A02A
4	Label, AccuMax II, 40GPM, Spec	Label	XE-MAX1PLSPC-A04A
5	Label, AccuMax II, 60GPM, Spec	Label	XE-MAX1PLSPC-A06A
6	Label, AccuMax II, 90GPM, Spec	Label	XE-MAX1PLSPC-A09A
7	Label, AccuMax II, 150GPM, Spec	Label	XE-MAX1PLSPC-A15A
8	Label, AccuMax II, 200GPM, Spec	Label	XE-MAX1PLSPC-A30A

ELECTRICAL COMPONENTS -- ACCUMAX II SYSTEM			
ITEM	**DESCRIPTION**	**TYPE**	**PART ID**
1	Foam System Controller, FURY Display, MAX 100	Display	XE-MAX100-D0A
2	Foam System Controller, FUSION Display, MAX 200	Display	XE-MAX200-D0A
3	Foam-Aux, Display, D0A	Display	XE-MAX150-D0A
4	Valve Controller, APEX, Elkhart	Display	XE-VC300-D0A
5	Power Tap, Power/Data Connector, 6 Pin x (2) 2 Pin	Power Tap	XE-MAX200PT-A0A
6	Power Terminals, Red/Black, Stud x 12 Pin, Qty (2)	Power Terminal	XE -MAX200PWR-C0A
7	Isolator, Power/Data Connector, 6 Pin	Isolator	XE-MAX210ISO6P-C0B
8	Hydraulic Controller Module, AccuMax II	Hydraulic Controller	XE-MAX220HY-D0A
9	Hydraulic Controller Module, AccuMax II, w/Backup	Hydraulic Controller	XE-MAX220HY-D1A
10	Tank Sensor, TankVision, NPT, 3/8"	Tank Sensor	2530-0111
11	Pressure Transducer, 3/8", NPT	Pressure Transducer	XE-FP4000PT3-S0C

CABLE ONLY COMPONENTS -- ACCUMAX II SYSTEM

ITEM	DESCRIPTION	TYPE	PART ID
1	Cable, MAX200, Data 6 Pin x Data 3 Pin, 3 Ft. Long	Data Cable	XE-MAX2006DP3DP-C3A
2	Cable, Data Bus, Extension, 3 Pin, 1 FT Long	Data Bus Extension Cable	XE-MAX210-DBEXT-C01B
3	Cable, Data Bus, Extension, 3 Pin, 2 FT Long	Data Bus Extension Cable	XE-MAX210-DBEXT-C02B
4	Cable, Data Bus, Extension, 3 Pin, 5 FT Long	Data Bus Extension Cable	XE-MAX210-DBEXT-C05B
5	Cable, Data Bus, Extension, 3 Pin, 10 FT Long	Data Bus Extension Cable	XE-MAX210-DBEXT-C10B
6	Cable, Data Bus, Extension, 3 Pin, 15 FT Long	Data Bus Extension Cable	XE-MAX210-DBEXT-C15B
7	Cable, Data Bus, Extension, 3 Pin, 20 FT Long	Data Bus Extension Cable	XE-MAX210-DBEXT-C20B
8	Cable, Sensor Low-Flow Bypass, Mag FM & Pres Trans, 10 Ft. Long	Low-Flow Cable	XE-MAX210BYFP-C10A
9	Cable, Sensor Low-Flow Bypass, Siemens FM & Pres Trans, 3 Ft. Long	Low-Flow Cable	XE-MAX210BYFP-C3A
10	Cable, FLI to Water FM & Pres Trans, 10 Ft. Long	FLI Injector Cable	XE-MAX210LCFP-C10A
11	Cable, FLI to Water FM & Pres Trans, 30 Ft. Long	FLI Injector Cable	XE-MAX210LCFP-C30A
12	Cable, FLI to Water FM & Pres Trans, 3 Ft. Long	FLI Injector Cable	XE-MAX210LCFP-C3A
13	Cable, Power/Data Extension, 6 Pin, 1 FT Long	Power Extension Cable	XE-MAX210PWREXT-C01B
14	Cable, Power/Data Extension, 6 Pin, 2 FT Long	Power Extension Cable	XE-MAX210PWREXT-C02B
15	Cable, Power/Data Extension, 6 Pin, 5 FT Long	Power Extension Cable	XE-MAX210PWREXT-C05B
16	Cable, Power/Data Extension, 6 Pin, 10 FT Long	Power Extension Cable	XE-MAX210PWREXT-C10B
17	Cable, Power/Data Extension, 6 Pin, 15 FT Long	Power Extension Cable	XE-MAX210PWREXT-C15B
18	Cable, Power/Data Extension, 6 Pin, 20 FT Long	Power Extension Cable	XE-MAX210PWREXT-C20B
19	Cable, Terminator, 6 Pin Assembly	Terminating Plug	XE-MAX210TERM6P-C0A
20	Cable, Terminator, 3 Pin Assembly	Terminating Plug	XE-MAX210TERM3P-C0A
21	Cable, Hydraulic Pump, Driver, 10 Ft. Long	Hydraulic Pump Driver Cable	XE-MAX220HY-C10A
22	Cable, Hydraulic Pump, Driver, 20 Ft. Long	Hydraulic Pump Driver Cable	XE-MAX220HY-C20A
23	Cable, Hydraulic Pump, Driver, 10 Ft. Long, Reverse	Hydraulic Pump Driver Cable	XE-MAX220HYR-C10A
24	Cable, Hydraulic Pump, Driver, 20 Ft. Long, Reverse	Hydraulic Pump Driver Cable	XE-MAX220HYR-C20A
25	Cable, Power/Data, 6 Pin, (1) Rcptl x (2)Plugs	Power/Data TEE	ZK-XXDLPY-C0A
26	Cable, Foam Tank Switch, 10FT, Kit	Tank Display Cable	XE-MAX220FSW-C10A
27	Cable, Foam Tank Switch, 20FT, Kit	Tank Display Cable	XE-MAX220FSW-C20A

FOAM SYSTEM COMPONENT PART NUMBERS -- ACCUMAX II SYSTEM			
ITEM	**DESCRIPTION**	**TYPE**	**PART ID**
1	Relief Valve, 1.5", Foam System	Relief Valve	3300-0101
2	Wye Strainer, Foam Pump, 2", #3020	Wye Strainer	3350-0145
3	Wye Strainer, Foam Pump, 2", #3040	Wye Strainer	3350-0145
4	Wye Strainer, Foam Pump, 2", #3060	Wye Strainer	3350-0146
5	Wye Strainer, Foam Pump, 3", #3090	Wye Strainer	3350-0147
6	Wye Strainer, Foam Pump, 3", #3150	Wye Strainer	3350-0147
7	Wye Strainer, Foam Pump, 4", #3300	Wye Strainer	3350-1001
8	Foam Flowmeter, Mag-Type, 1/2" NPT, #3020	Foam Flowmeter	2660-0058
9	Foam Flowmeter, Mag-Type, 1", NPT, #3040	Foam Flowmeter	2660-0041
10	Foam Flowmeter, Mag-Type, 1", NPT, #3060	Foam Flowmeter	2660-0041
11	Foam Flowmeter, Mag-Type, 1.5", NPT, #3090	Foam Flowmeter	2660-0043
12	Foam Flowmeter, Mag-Type, 1.5", NPT, #3150	Foam Flowmeter	2660-0043
13	Foam Flowmeter, Siemens, 2", Flanged, #3300	Foam Flowmeter	2660-1038

1.0" Low-Flow Bypass Assembly and 0.5”, 1.0”, 1.5” Foam Line Injector Base Drawing (Top, Side and Front Views)

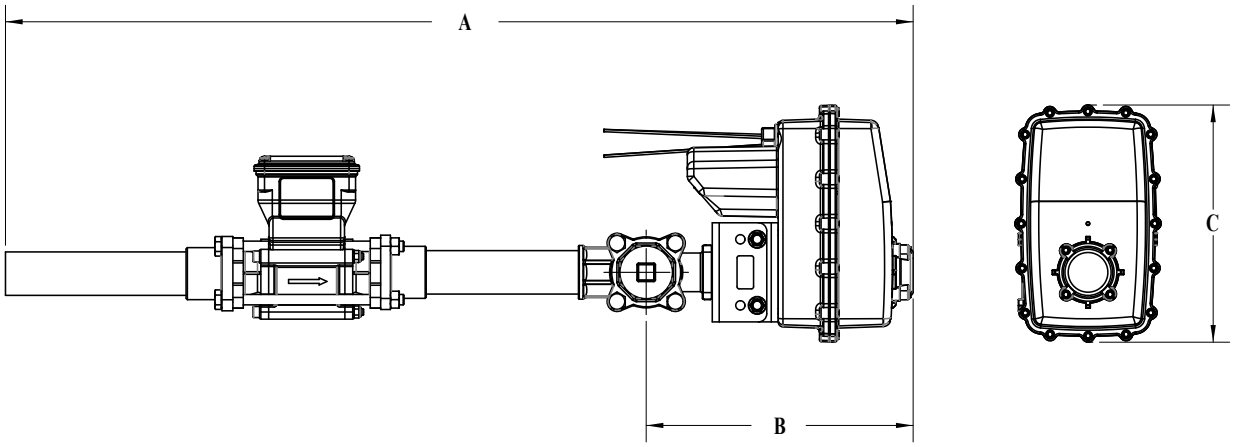

FOAM LINE INJECTOR ASSEMBLIES -- Dimensions, Flow Capacities, & Part Numbers							
				Dimensions			Pipe Dmtr / Thread
Item	Assembly -- Part Number	Description	FOAM CONC Flow Range	A	B	C	D
1	XE-MAX210BY-K10A	Low-Flow Bypass Assembly Kit - 1"	6-60 GPM / 22.2-225 LPM	27.5"	7.875"	7.1875"	1.0"NPT
Sub-Assembly -- Part Number							
2	XE0MAX210-U10	Metering Valve - 1"					
3	XE-MAX210M-D0B	Actuator Assembly					
4	2660-0041	Foam Mag Flowmeter -- 1" NPT					
5	3320-0041	Check Valve -- 1" NPT					

FOAM LINE INJECTOR ASSEMBLIES -- Dimensions, Flow Capacities, & Part Numbers							
				Dimensions			Pipe Dmtr / Thread
ITEM	Assembly -- Part Number	Description	FOAM CONC Flow Range	A	B	C	D
1	XE-MAX210LC-K05A	Foam Line Injector Assembly Kit - 0.50"	2.6 - 26 GPM / 9.75-97.5 LPM	23"	7.875"	7.1875"	0.50" NPT
	Sub-Assembly -- Part Number						
2	XE0MAX210-U10	Metering Valve - 1.0”					
3	XE-MAX210M-D0B	Actuator Assembly					
4	2660-0058	Foam Mag Flowmeter -- 0.50" NPT					
5	3304-0027	Calibration 3-Way Valve -- 1" NPT					
6	3320-0045	Check Valve -- 0.50” NPT					

FOAM LINE INJECTOR ASSEMBLIES -- Dimensions, Flow Capacities, & Part Numbers

				Dimensions			Pipe Dmtr / Thread
ITEM	Assembly -- Part Number	Description	FOAM CONC Flow Range	A	B	C	D
1	XE-MAX210LC-K10A	Foam Line Injector Assembly Kit - 1"	6-60 GPM / 22.2-225 LPM	27.5"	7.875"	7.1875"	1.0" NPT
Sub-Assembly -- Part Number							
2	XE-MAX210-U10	Metering Valve - 1.0"					
3	XE-MAX210M-D0B	Actuator Assembly					
4	2660-1041	Foam Mag Flowmeter -- 1" NPT					
5	3304-0027	Calibration 3-Way Valve -- 1" NPT					
6	3320-0041	Check Valve -- 1" NPT					

FOAM LINE INJECTOR ASSEMBLIES -- Dimensions, Flow Capacities, & Part Numbers

				Dimensions			Pipe Dmtr / Thread
Item	Assembly -- Part Number	Description	FOAM CONC Flow Range	A	B	C	D
1	XE-MAX210LC-K15A	Foam Line Injector Assembly Kit - 1.5"	16-150 GPM / 60-562.5 LPM	30"	8.5"	7.1875"	1.5" NPT
Sub-Assembly -- Part Number							
2	XE-MAX210-U15	Metering Valve - 1.5"					
3	XE-MAX210M-D0B	Actuator Assembly					
4	2660-0043	Foam Mag Flowmeter -- 1.5" NPT					
5	3304-0029	Calibration 3-Way Valve -- 1.5" NPT					
6	3320-0048	Check Valve -- 1.5" NPT					

2.0" Foam Line Injector Drawing

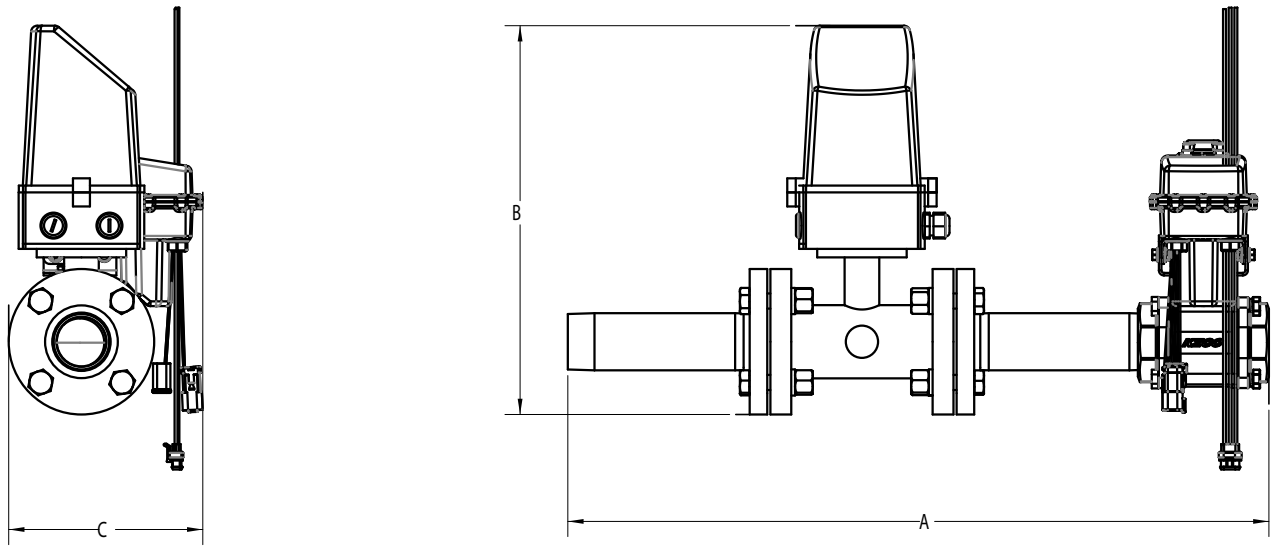

FOAM LINE INJECTOR ASSEMBLIES -- Dimensions, Flow Capacities, & Part Numbers							
				Dimensions			Pipe Dmtr / Thread
Item	Assembly -- Part Number	Description	FOAM CONC Flow Range	A	B	C	D
1	XE-MAX210LC-K20A	Foam Line Injector Assembly Kit - 2"	24-300 GPM / 90-1125 LPM	29”	16"	8"	2.0" NPT
	Sub-Assembly -- Part Number						
2	XE-MAX210-U20	Metering Valve - 2"					
3	XE-MAX210M-D0B	Actuator Assembly					
4	2660-1038	Foam Flowmeter Siemens -- 2" NPT					
5	3304-0030	Calibration 3-Way Valve -- 2" NPT					
6	3320-0050	Check Valve -- 2" NPT					

Water Flowmeters -- Part Numbers, Size, Abbreviations, And Descriptions

	Water Flowmeter Abbreviation Chart		
	SENSOR PHOTO	ABBREVIATION	DESCRIPTION
		SS	Stainless Steel Weldment
		S	Steel Weldment
		AL	Aluminum Weldment
		PT	Pipe Tee
		SC	Saddle Clamp
		M	Manifold
		SS+FC	Stainless Steel Weldment + Flow Conditioner
		SS+ST	Stainless Steel Weldment + Shallow Throat
		S+FC	Steel Weldment + Flow Conditioner
		AL+FC	Aluminum Weldment + Flow Conditioner
		PT+FC	Pipe Tee + Flow Conditioner
		SC+FC	Saddle Clamp + Flow Conditioner

	Water Flowmeter -- Size, Mounting, Part Number Chart					
					WATER FLOW RATE	
	Part Number	Size	Abbrev	WATER FLOWMETER SENSOR Mounting Type & Description	Max Accuracy Flow Rate Range GPM (LPM)	Max Operating Flow Rate Range GPM (LPM)
ITEM	WATER FLOW SENSOR -- 1" SIZE				WATER FLOW RATE	
1	***XE-FM010PT1-M0A***	1"	PT	Pipe Tee Mntg - 1"	3-135 (11 - 511)	4 - 134 (15 - 507)
	WATER FLOW SENSOR -- 1.5" SIZE				WATER FLOW RATE	
2	***XE-TF2FMANFL-M15A***	1.5"	M	Manifold Mntg - 1.5"	9 - 318 (34 - 1,204)	7 - 380 (26 - 1,438)
3	***XE-FM015PT1-M0A***	1.5"	PT	Pipe Tee Mntg - 1.5"		
4	***XE-FM015ST1-M0A***	1.5"	S	Steel Weldment Mntg - 1.5"		
5	***XE-FM015SS1-M0A***	1.5"	SS	S/Steel Weldment Mntg - 1.5"		
	WATER FLOW SENSOR -- 2" SIZE				WATER FLOW RATE	
6	***XE-FM020AL1-M0A***	2"	AL	Aluminum Weldment Mntg - 2"	16 - 523 (61 - 1,980)	11 - 627 (41 - 2,373)
7	***XE-FM020AL2-M0A***	2"	AL+FC	Aluminum Weldment Mntg & Flow Conditioner - 2"		
8	***XE-TF2FMANFL-M20A***	2"	M	Manifold Mntg - 2"		
9	***XE-FM020PT1-M0A***	2"	PT	Pipe Tee Mntg - 2"		
10	***XE-FM020PT2-M0A***	2"	PT+FC	Pipe Tee Mntg & Flow Conditioner - 2"		
11	***XE-FM020ST1-M0A***	2"	S	Steel Weldment Mntg - 2"		
12	***XE-FM020ST2-M0A***	2"	S+FC	Steel Weldment Mntg & Flow Conditioner - 2"		
13	***XE-FM020SC1-M0A***	2"	SC	Saddle Clamp Mntg - 2"		
14	***XE-FM020SC2-M0A***	2"	SC+FC	Saddle Clamp Mntg & Flow Conditioner - 2"		
15	***XE-FM020SS1-M0A***	2"	SS	S/Steel Weldment Mntg - 2"		
16	***XE-FM020SS2-M0A***	2"	SS+FC	S/Steel Weldment Mntg & Flow Conditioner - 2"		

	WATER FLOW SENSOR -- 2.5" SIZE				WATER FLOW RATE	
17	***XE-FM025AL1-M0A***	2.5"	AL	Aluminum Weldment Mntg - 2.5"	22 - 746 (83 - 2,823)	16 - 895 (60 - 3,388)
18	***XE-FM025AL2-M0A***	2.5"	AL+FC	Aluminum Weldment Mntg & Flow Conditioner - 2.5"		
19	***XE-TF2FMANFL-M25A***	2.5"	M	Manifold Mntg - 2.5"		
20	***XE-FM025PT1-M0A***	2.5"	PT	Pipe Tee Mntg - 2.5"		
21	***XE-FM025PT2-M0A***	2.5"	PT+FC	Pipe Tee Mntg & Flow Conditioner - 2.5"		
22	***XE-FM025ST1-M0A***	2.5"	S	Steel Weldment Mntg - 2.5"		
23	***XE-FM025ST2-M0A***	2.5"	S+FC	Steel Weldment Mntg & Flow Conditioner - 2.5"		
24	***XE-FM025SC1-M0A***	2.5"	SC	Saddle Clamp Mntg - 2.5"		
25	***XE-FM025SC2-M0A***	2.5"	SC+FC	Saddle Clamp Mntg & Flow Conditioner - 2.5"		
26	***XE-FM025SS1-M0A***	2.5"	SS	S/Steel Weldment Mntg - 2.5"		
27	***XE-FM025SS2-M0A***	2.5"	SS+FC	S/Steel Weldment Mntg & Flow Conditioner - 2.5"		
	WATER FLOW SENSOR -- 3" SIZE				WATER FLOW RATE	
28	***XE-FM030AL1-M0A***	3"	AL	Aluminum Weldment Mntg - 3"	35 - 1,152 (132 - 4,361)	25- 1,382 (95 - 5,231)
29	***XE-FM030AL2-M0A***	3"	AL+FC	Aluminum Weldment Mntg & Flow Conditioner - 3"		
30	***XE-TF2FMANFL-M30A***	3"	M	Manifold Mntg - 3"		
31	***XE-FM030PT1-M0A***	3"	PT	Pipe Tee Mntg - 3"		
32	***XE-FM030PT2-M0A***	3"	PT+FC	Pipe Tee Mntg & Flow Conditioner - 3"		
33	***XE-FM030ST1-M0A***	3"	S	Steel Weldment Mntg - 3"		
34	***XE-FM030ST2-M0A***	3"	S+FC	Steel Weldment Mntg & Flow Conditioner - 3"		
35	***XE-FM030SC1-M0A***	3"	SC	Saddle Clamp Mntg - 3"		
36	***XE-FM030SC2-M0A***	3"	SC+FC	Saddle Clamp Mntg & Flow Conditioner - 3"		
37	***XE-FM030SS1-M0A***	3"	SS	S/Steel Weldment Mntg - 3"		
38	***XE-FM030SS2-M0A***	3"	SS+FC	S/Steel Weldment Mntg & Flow Conditioner - 3"		
	WATER FLOW SENSOR -- 3.5" SIZE				WATER FLOW RATE	
39	XE-FM035AL1-M0A	3.5"	AL	Aluminum Weldment Mntg - 3.5"	47 - 1,532 (178 - 5,800)	34 - 1,838 (128 - 6,957)
40	XE-FM035AL2-M0A	3.5"	AL+FC	Aluminum Weldment Mntg & Flow Conditioner - 3.5"		
41	XE-FM035ST1-M0A	3.5"	S	Steel Weldment Mntg - 3.5"		
42	XE-FM035ST2-M0A	3.5"	S+FC	Steel Weldment Mntg & Flow Conditioner - 3.5"		
43	XE-FM035SS1-M0A	3.5"	SS	S/Steel Weldment Mntg - 3.5"		
44	XE-FM035SS2-M0A	3.5"	SS+FC	S/Steel Weldment Mntg & Flow Conditioner - 3.5"		
	WATER FLOW SENSOR -- 4" SIZE				WATER FLOW RATE	
45	XE-FM040AL1-M0A	4"	AL	Aluminum Weldment Mntg - 4"	59 - 1,984 (223 - 7,510)	44 - 2,380 (166 - 9,009)
46	XE-FM040AL2-M0A	4"	AL+FC	Aluminum Weldment Mntg & Flow Conditioner - 4"		
47	XE-TF2FMANFL-M40A	4"	M	Manifold Mntg - 4"		
48	XE-FM040PT1-M0A	4"	PT	Pipe Tee Mntg - 4"		
49	XE-FM040PT2-M0A	4"	PT+FC	Pipe Tee Mntg & Flow Conditioner - 4"		
50	XE-FM040ST1-M0A	4"	S	Steel Weldment Mntg - 4"		
51	XE-FM040ST2-M0A	4"	S+FC	Steel Weldment Mntg & Flow Conditioner - 4"		
52	XE-FM040SC1-M0A	4"	SC	Saddle Clamp Mntg - 4"		
53	XE-FM040SC2-M0A	4"	SC+FC	Saddle Clamp Mntg & Flow Conditioner - 4"		
54	XE-FM040SS1-M0A	4"	SS	S/Steel Weldment Mntg & Flow Conditioner, 313 Fitting- 4"		
55	XE-FM040SS2-M0A	4"	SS+FC	S/Steel Weldment Mntg - 4"		

	WATER FLOW SENSOR -- 5" SIZE				WATER FLOW RATE	
56	***XE-FM050AL1-M0A***	5"	AL	Aluminum Weldment Mntg - 5"	94 - 3,120 (356 - 11,810)	69 - 3,700 (261 - 14,006)
57	***XE-FM050AL2-M0A***	5"	AL+FC	Aluminum Weldment Mntg & Flow Conditioner - 5"		
58	***XE-FM050PT1-M0A***	5"	PT	Pipe Tee Mntg - 5"		
59	***XE-FM050PT2-M0A***	5"	PT+FC	Pipe Tee Mntg & Flow Conditioner - 5"		
60	***XE-FM050ST1-M0A***	5"	S	Steel Weldment Mntg - 5"		
61	***XE-FM050ST2-M0A***	5"	S+FC	Steel Weldment Mntg & Flow Conditioner - 5"		
62	***XE-FM050SC1-M0A***	5"	SC	Saddle Clamp Mntg - 5"		
63	***XE-FM050SC2-M0A***	5"	SC+FC	Saddle Clamp Mntg & Flow Conditioner - 5"		
64	***XE-FM050SS1-M0A***	5"	SS	S/Steel Weldment Mntg - 5"		
65	***XE-FM050SS2-M0A***	5"	SS+FC	S/Steel Weldment Mntg & Flow Conditioner - 5"		
	WATER FLOW SENSOR -- 6" SIZE				WATER FLOW RATE	
66	XE-FM060AL1-M0A	6"	AL	Aluminum Weldment Mntg - 6"	140 - 4,600 (530 - 17,413)	100 - 5,600 (379 - 21,198)
67	XE-FM060AL2-M0A	6"	AL+FC	Aluminum Weldment Mntg & Flow Conditioner - 6"		
68	XE-FM060PT1-M0A	6"	PT	Pipe Tee Mntg - 6"		
69	XE-FM060PT2-M0A	6"	PT+FC	Pipe Tee Mntg & Flow Conditioner - 6"		
70	XE-FM060ST1-M0A	6"	S	Steel Weldment Mntg - 6"		
71	XE-FM060ST2-M0A	6"	S+FC	Steel Weldment Mntg & Flow Conditioner - 6"		
72	XE-FM060SC1-M0A	6"	SC	Saddle Clamp Mntg - 6"		
73	XE-FM060SC2-M0A	6"	SC+FC	Saddle Clamp Mntg & Flow Conditioner - 6"		
74	XE-FM060SS1-M0A	6"	SS	S/Steel Weldment Mntg - 6"		
75	XE-FM060SS2-M0A	6"	SS+FC	S/Steel Weldment Mntg & Flow Conditioner - 6"		
76	XE-FM060SS3-M0A	6"	SS+ST	S/Steel Weldment Mntg & Shallow Throat - 6"		
	WATER FLOW SENSOR -- 8" SIZE				WATER FLOW RATE	
77	XE-FM080AL1-M0A	8"	AL	Aluminum Weldment Mntg - 8"	234 - 7,800 (886 - 29,526)	154 - 9,330 (583 - 35,318)
78	XE-FM080AL2-M0A	8"	AL+FC	Aluminum Weldment Mntg & Flow Conditioner - 8"		
79	XE-FM080ST1-M0A	8"	S	Steel Weldment Mntg - 8"		
80	XE-FM080ST2-M0A	8"	S+FC	Steel Weldment Mntg & Flow Conditioner - 8"		
81	XE-FM080SC1-M0A	8"	SC	Saddle Clamp Mntg - 8"		
82	XE-FM080SC2-M0A	8"	SC+FC	Saddle Clamp Mntg & Flow Conditioner - 8"		
83	XE-FM080SS1-M0A	8"	SS	S/Steel Weldment Mntg - 8"		
84	XE-FM080SS2-M0A	8"	SS+FC	S/Steel Weldment Mntg & Flow Conditioner - 8"		
85	XE-FM080SS3-M0A	8"	SS+ST	S/Steel Weldment Mntg & Shallow Throat - 8"		
	WATER FLOW SENSOR -- 12" SIZE				WATER FLOW RATE	
86	XE-FM120SC1-M0A	12"	SC	Saddle Clamp Mntg - 12"	520 - 17,200 (1,968 - 65,109)	378 - 20,600 (1,431 - 77,979)
87	XE-FM120SC2-M0A	12"	SC+FC	S/Steel Weldment Mntg & Flow Conditioner - 12"		

HYDRAULIC & FOAM PUMP COMPONENTS -- ACCUMAX II SYSTEM			
ITEM	**DESCRIPTION**	**TYPE**	**PART ID**
1	Hydraulic Variable Speed Pump, #3020	Hydraulic Pump	2500-0071
2	Hydraulic Variable Speed Pump, #3040	Hydraulic Pump	2500-0071
3	Hydraulic Variable Speed Pump, #3060	Hydraulic Pump	2500-0063
4	Hydraulic Variable Speed Pump, #3090	Hydraulic Pump	2500-0030
5	Hydraulic Variable Speed Pump, #3150	Hydraulic Pump	2500-0030
6	Hydraulic Variable Speed Pump, #3300	Hydraulic Pump	2500-0133
7	Hydraulic Pump Suction Filter, Spin-Off, #3040 Only	Hydraulic Filter	3350-0176

Hydraulic Pump 3020 & 3040

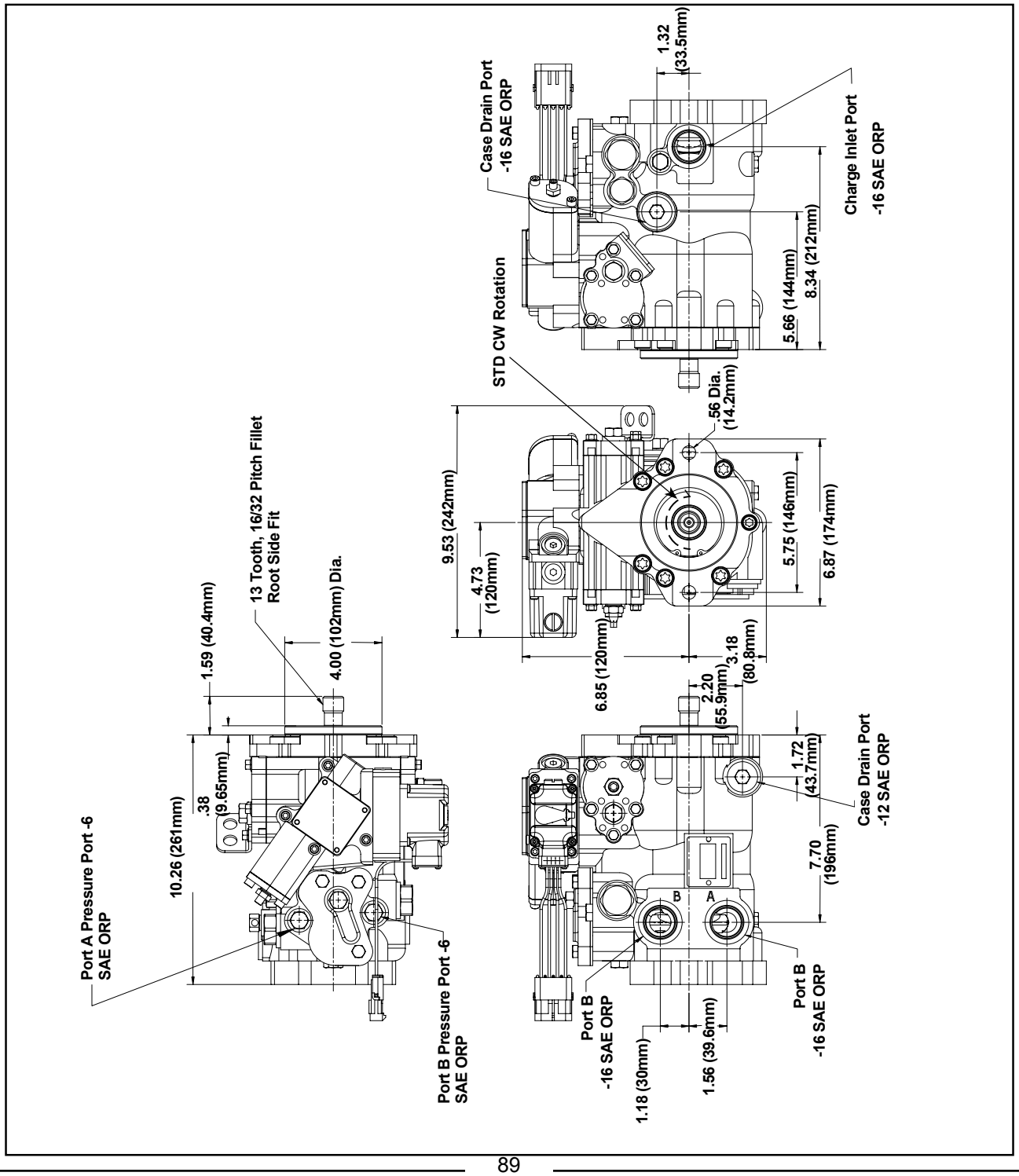

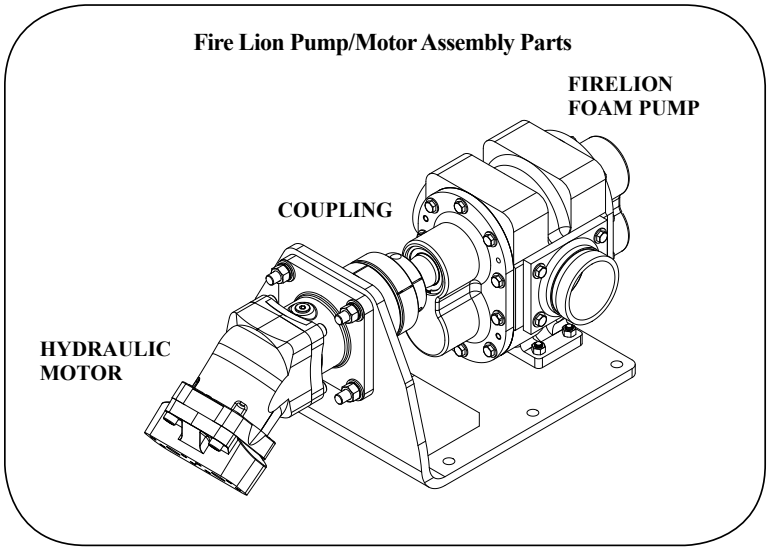

	FIRE LION FOAM PUMPS		
38	Foam Pump, FireLion, #3020	Foam Pump	8000-1010
39	Foam Pump, FireLion, #3040	Foam Pump	8000-1011
40	Foam Pump, FireLion, #3060	Foam Pump	8000-1012
41	Foam Pump, FireLion, #3090	Foam Pump	8000-1013
42	Foam Pump, FireLion, #3150	Foam Pump	8000-1014
43	Foam Pump, FireLion, #3300	Foam Pump	8000-1015
44	Coupling Half, Pump End, #3020	Coupling Half	2740-1002
45	Coupling Half, Pump End, #3040	Coupling Half	2740-1002
46	Coupling Half, Pump End, #3060	Coupling Half	2740-1003
47	Coupling Half, Pump End, #3090	Coupling Half	2740-1004
48	Coupling Half, Pump End, #3150	Coupling Half	2740-1004
49	Coupling Half, Pump End, #3300	Coupling Half	2740-1006
50	Coupling Insert, Center, #3020	Coupling Center	2729-1002
51	Coupling Insert, Center, #3040	Coupling Center	2729-1002
52	Coupling Insert, Center, #3060	Coupling Center	2729-1003
53	Coupling Insert, Center, #3090	Coupling Center	2729-1003
54	Coupling Insert, Center, #3150	Coupling Center	2729-1003
55	Coupling Insert, Center, #3300	Coupling Center	2729-1004
56	Coupling Half, Hyd Motor, #3020	Coupling Half	2740-1001
57	Coupling Half, Hyd Motor, #3040	Coupling Half	2740-1001
58	Coupling Half, Hyd Motor, #3060	Coupling Half	2740-1001
59	Coupling Half, Hyd Motor, #3090	Coupling Half	2740-1003
60	Coupling Half, Hyd Motor, #3150	Coupling Half	2740-1003
61	Coupling Half, Hyd Motor, #3300	Coupling Half	2740-1005
62	Hydraulic Motor, #3020	Hydraulic Motor	2500-0026
63	Hydraulic Motor, #3040	Hydraulic Motor	2500-0026
64	Hydraulic Motor, #3060	Hydraulic Motor	2500-0064
65	Hydraulic Motor, #3090	Hydraulic Motor	2500-1004
66	Hydraulic Motor, #3150	Hydraulic Motor	2500-1004
67	Hydraulic Motor, #3300	Hydraulic Motor	2500-1005

Hydraulic Pump 3060

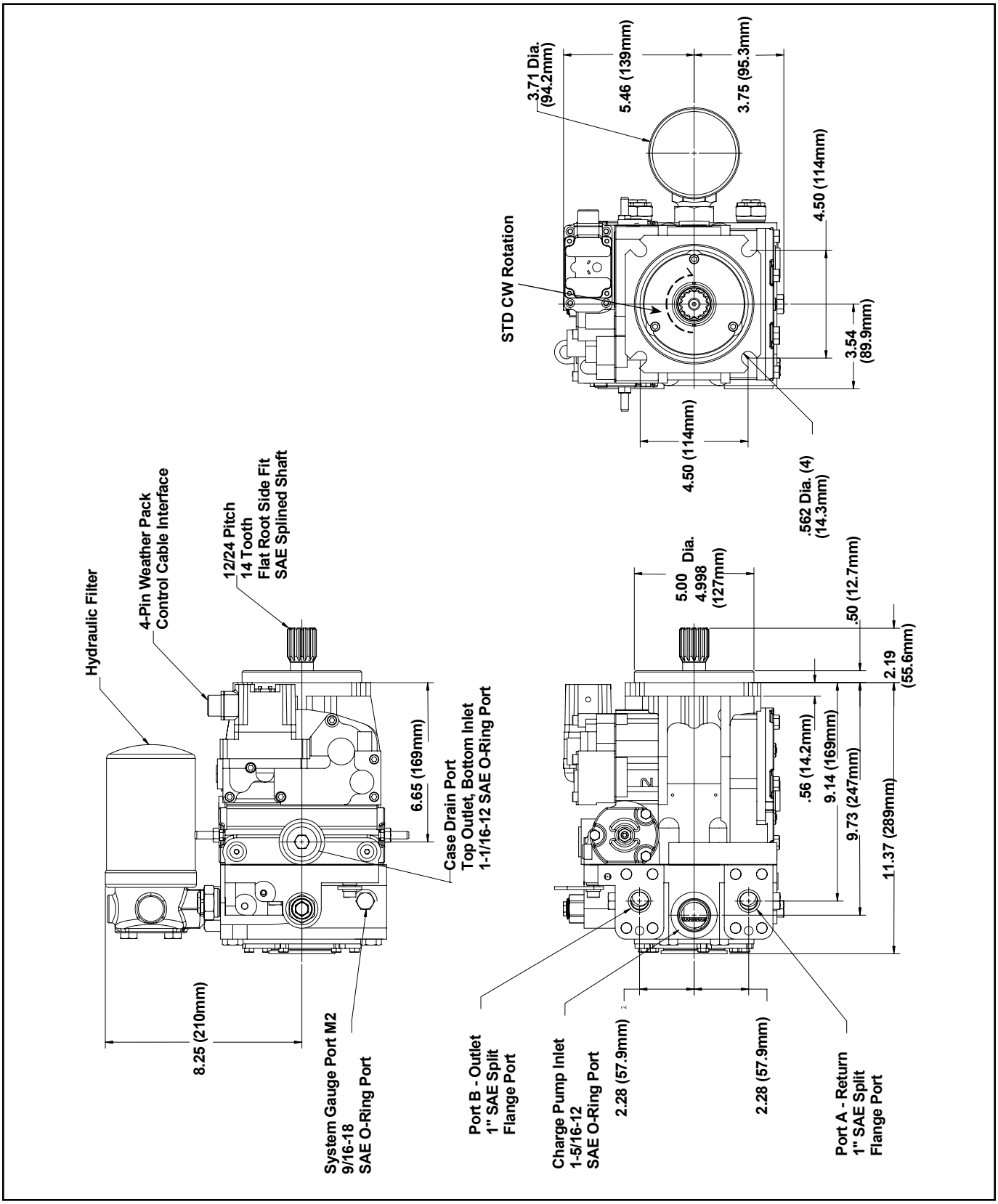

Hydraulic Pump 3090 and 3150

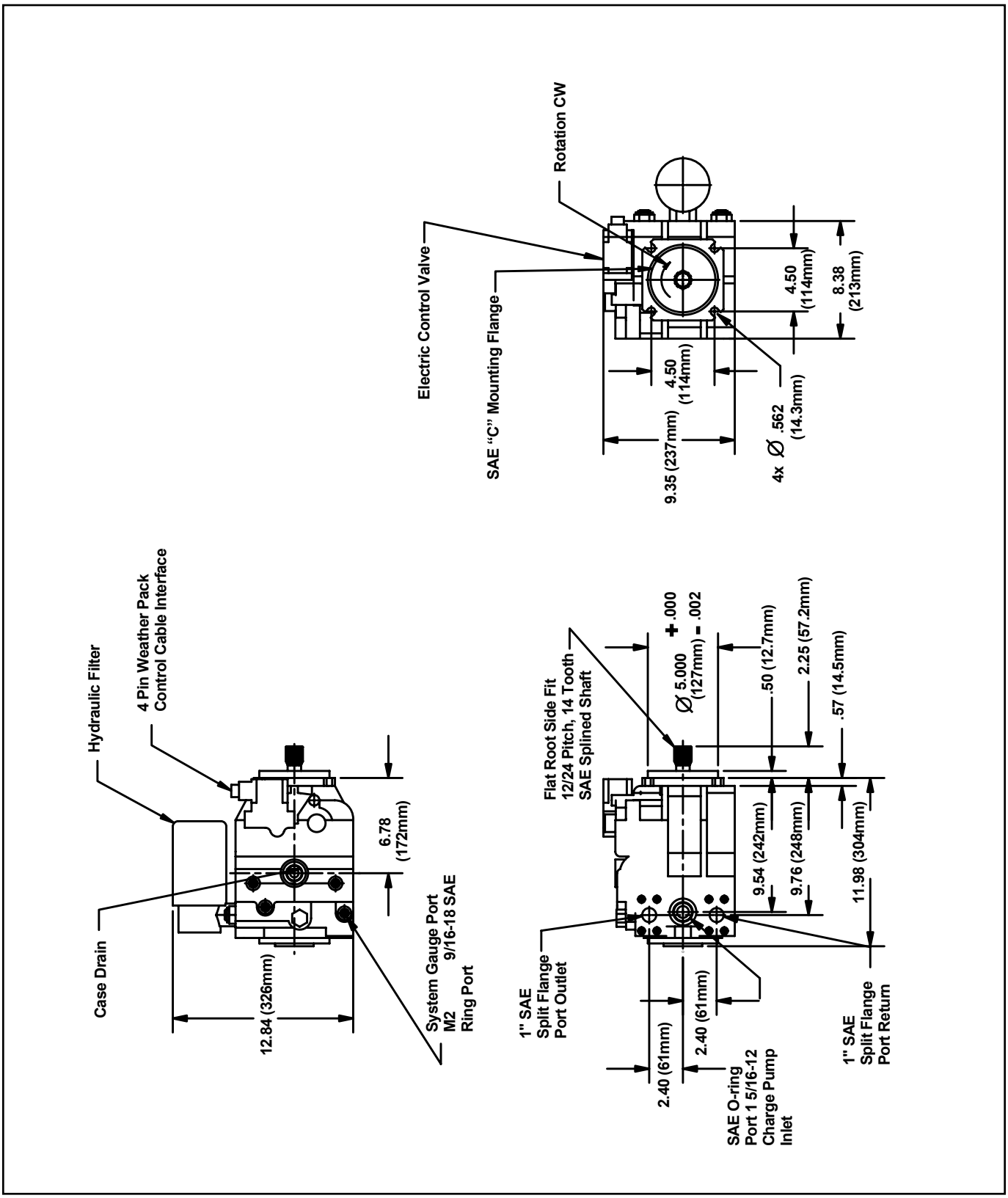

Hydraulic Pump 3300

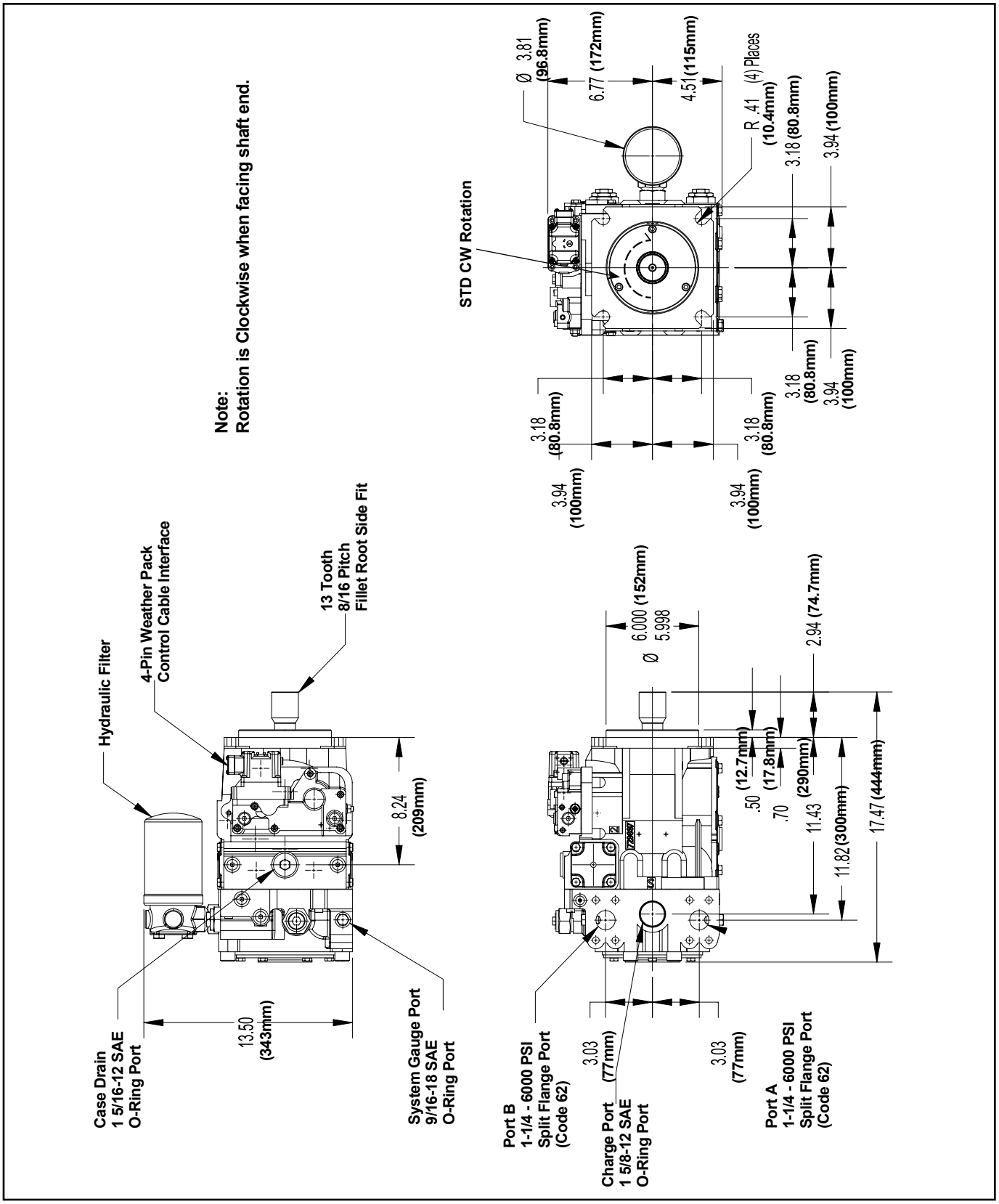

3020 – Fire Lion Pump/Motor Assembly (P/N 3450-1035)

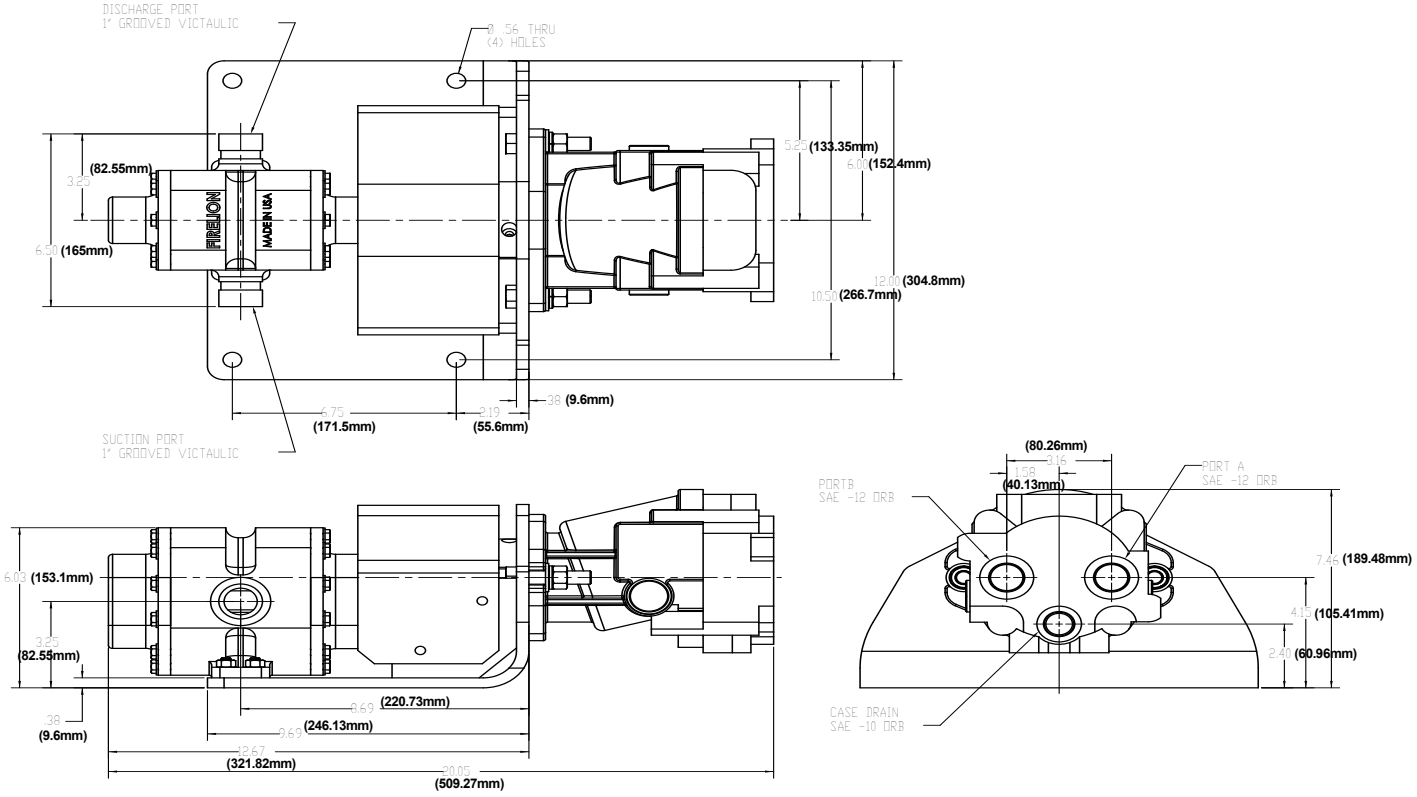

3040 – Fire Lion Pump/Motor Assembly (P/N 3450-1036)

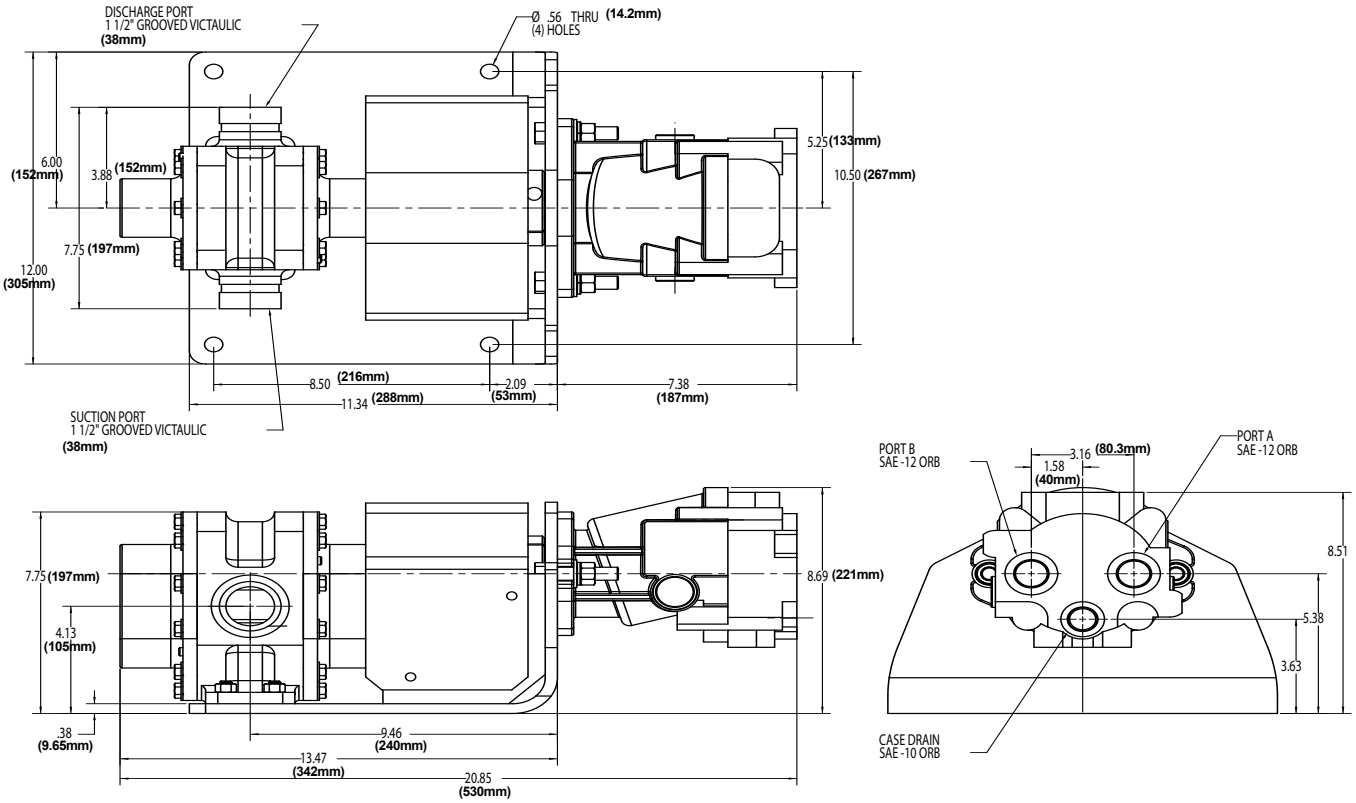

3060 – Fire Lion Pump/Motor Assembly (P/N 3450-1037)

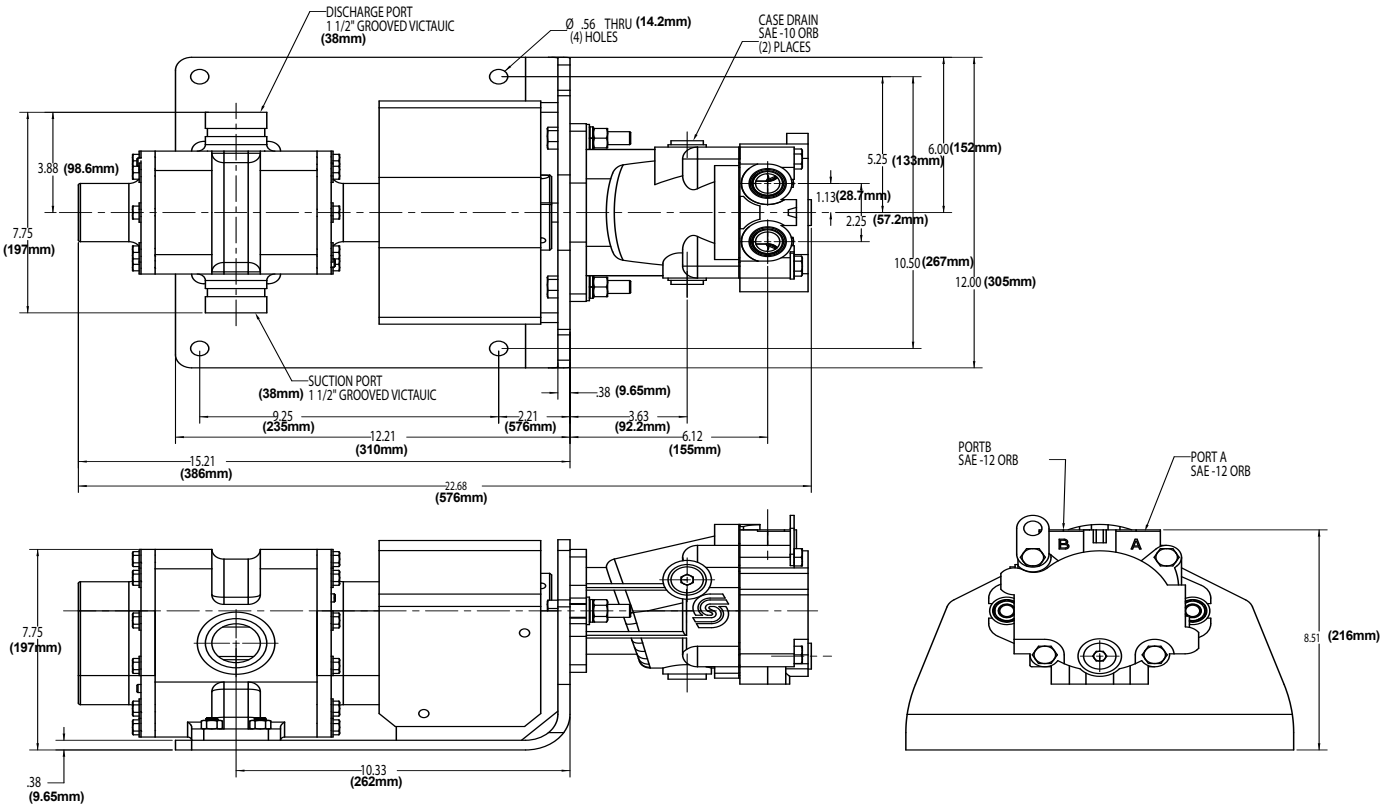

3090 – Fire Lion Pump/Motor Assembly (P/N 3450-1038)

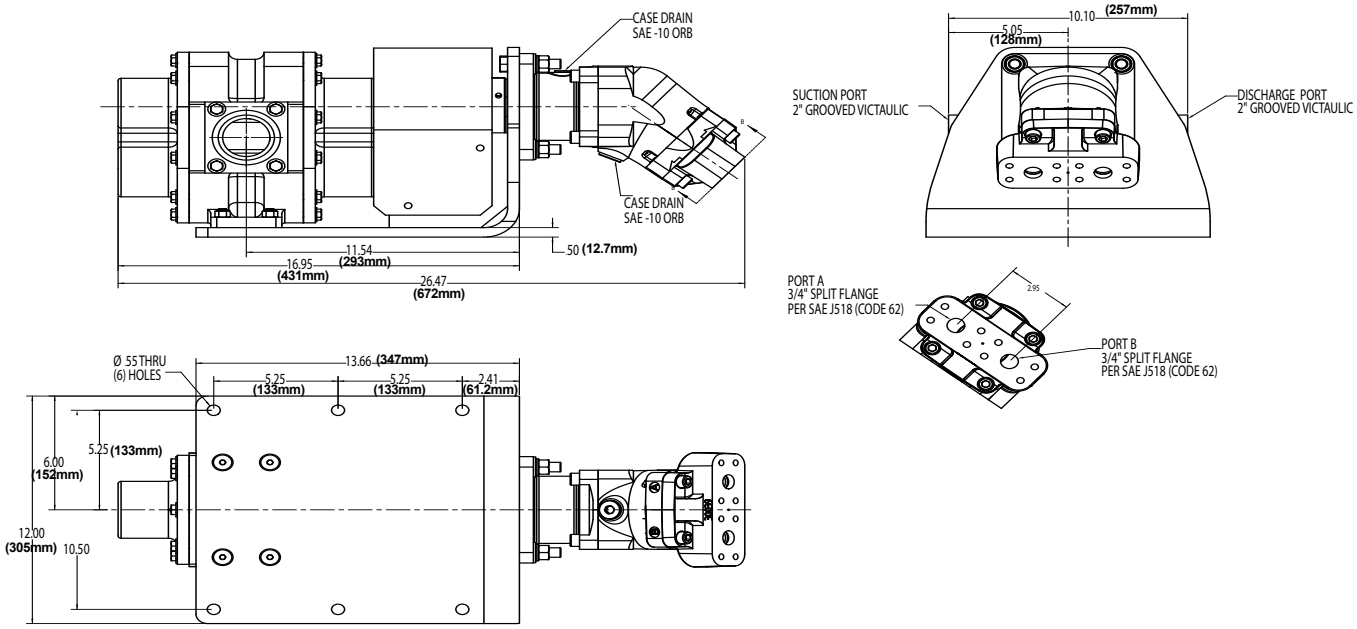

3150 – Fire Lion Pump/Motor Assembly (P/N 3450-1039)

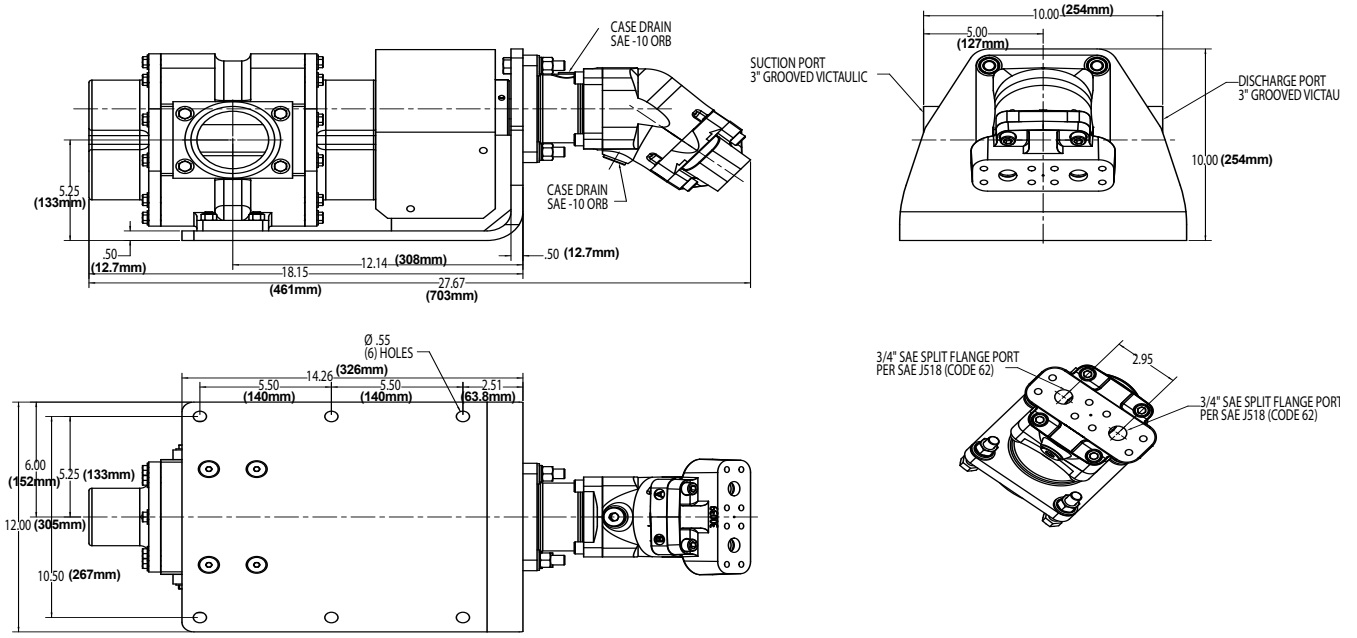

3300 – Fire Lion Pump/Motor Assembly (P/N 3450-1040)

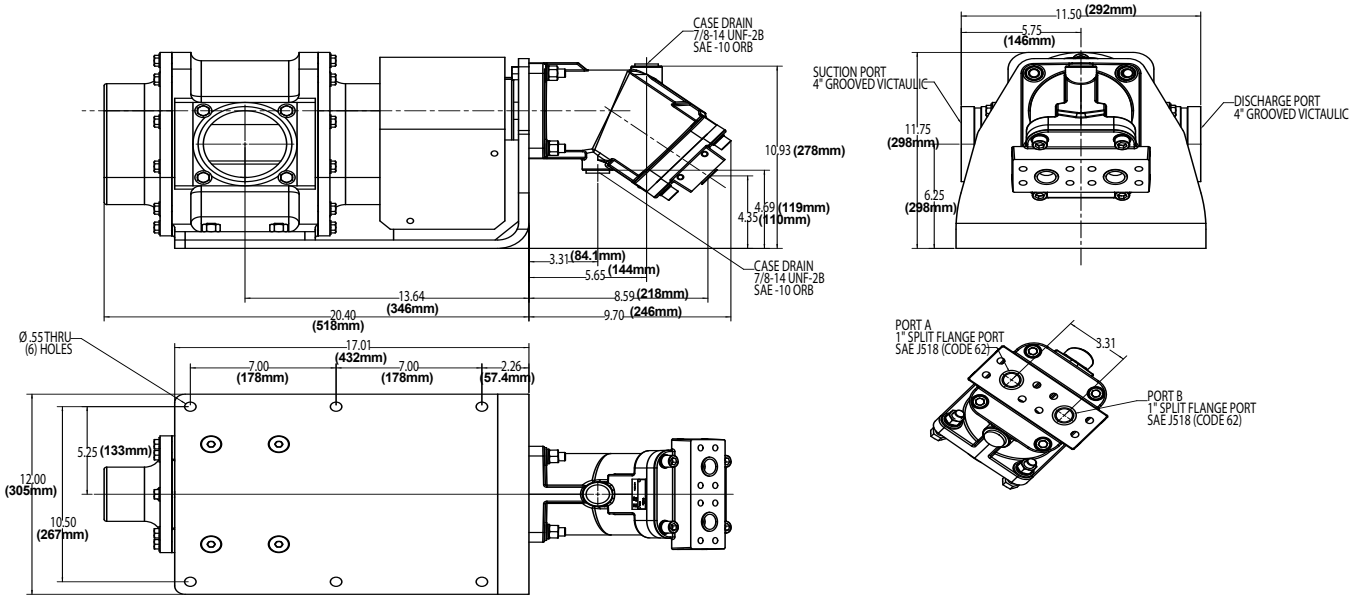

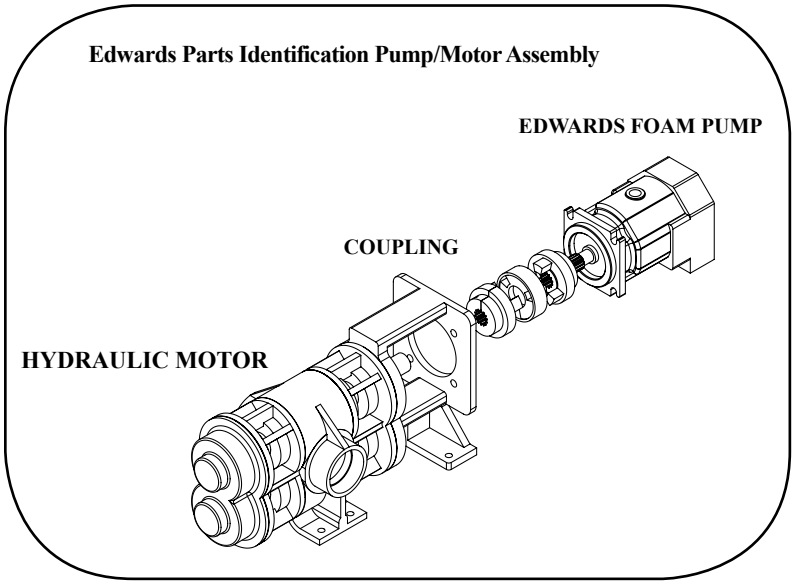

	EDWARDS FOAM PUMPS		
68	Foam Pump, Edwards, #3020	Foam Pump	8000-0075
69	Foam Pump, Edwards, #3040	Foam Pump	8000-0076
70	Foam Pump, Edwards, #3060	Foam Pump	8000-0077
71	Foam Pump, Edwards, #3090	Foam Pump	8000-0078
72	Foam Pump, Edwards, #3150	Foam Pump	8000-0079
73	Foam Pump, Edwards, #3300	Foam Pump	8000-0080
74	Coupling Half, Pump End, #3020	Coupling Half	2740-1014
75	Coupling Half, Pump End, #3040	Coupling Half	2740-1014
76	Coupling Half, Pump End, #3060	Coupling Half	2740-1008
77	Coupling Half, Pump End, #3090	Coupling Half	2740-1012
78	Coupling Half, Pump End, #3150	Coupling Half	2740-1012
79	Coupling Half, Pump End, #3300	Coupling Half	2740-1012
80	Coupling Insert, Center, #3020	Coupling Center	2729-0007
81	Coupling Insert, Center, #3040	Coupling Center	2729-1014
82	Coupling Insert, Center, #3060	Coupling Center	2729-1008
83	Coupling Insert, Center, #3090	Coupling Center	2729-1012
84	Coupling Insert, Center, #3150	Coupling Center	2729-1012
85	Coupling Insert, Center, #3300	Coupling Center	2729-1012
86	Coupling Half, Hyd Motor, #3020	Coupling Half	2740-1013
87	Coupling Half, Hyd Motor, #3040	Coupling Half	2740-1013
88	Coupling Half, Hyd Motor, #3060	Coupling Half	2740-0009
89	Coupling Half, Hyd Motor, #3090	Coupling Half	2740-0009
90	Coupling Half, Hyd Motor, #3150	Coupling Half	2740-0012
91	Coupling Half, Hyd Motor, #3300	Coupling Half	2740-0012
92	Hydraulic Motor, #3020	Hydraulic Motor	2500-0026
93	Hydraulic Motor, #3040	Hydraulic Motor	2500-0026
94	Hydraulic Motor, #3060	Hydraulic Motor	2500-0022
95	Hydraulic Motor, #3090	Hydraulic Motor	2500-1022
96	Hydraulic Motor, #3150	Hydraulic Motor	2500-1031
97	Hydraulic Motor, #3300	Hydraulic Motor	2500-1031

3020 & 3040 – Edwards Pump/Motor Assembly (P/N 3450-0071 & 3450-0072)

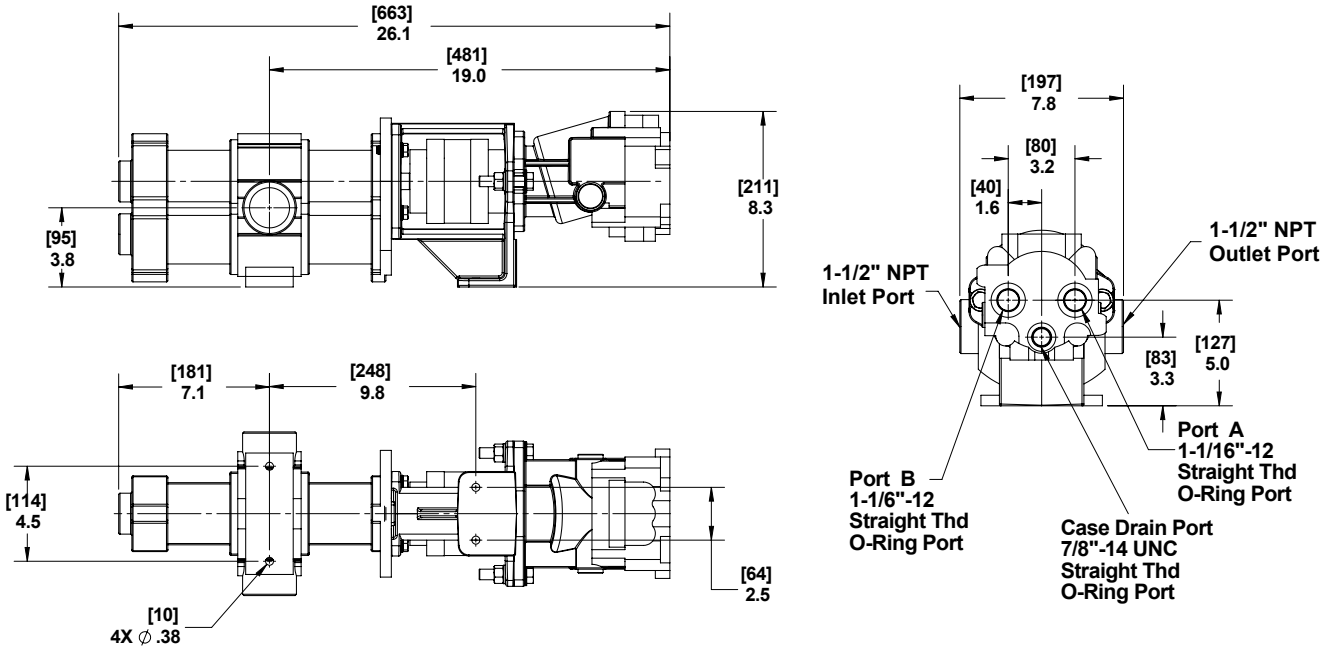

3060 – Edwards Pump/Motor Assembly (3450-0073)

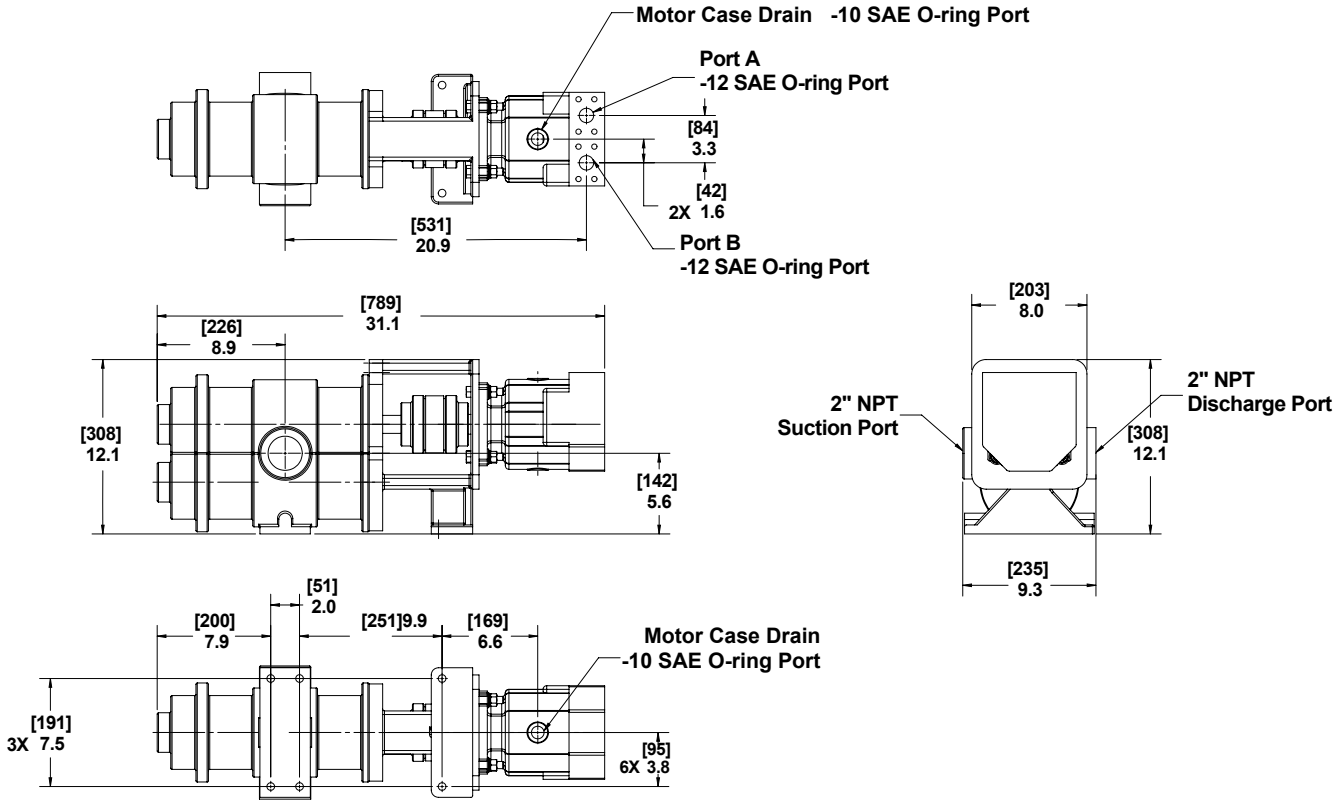

3090 – Edwards Pump/Motor Assembly (3450-0074)

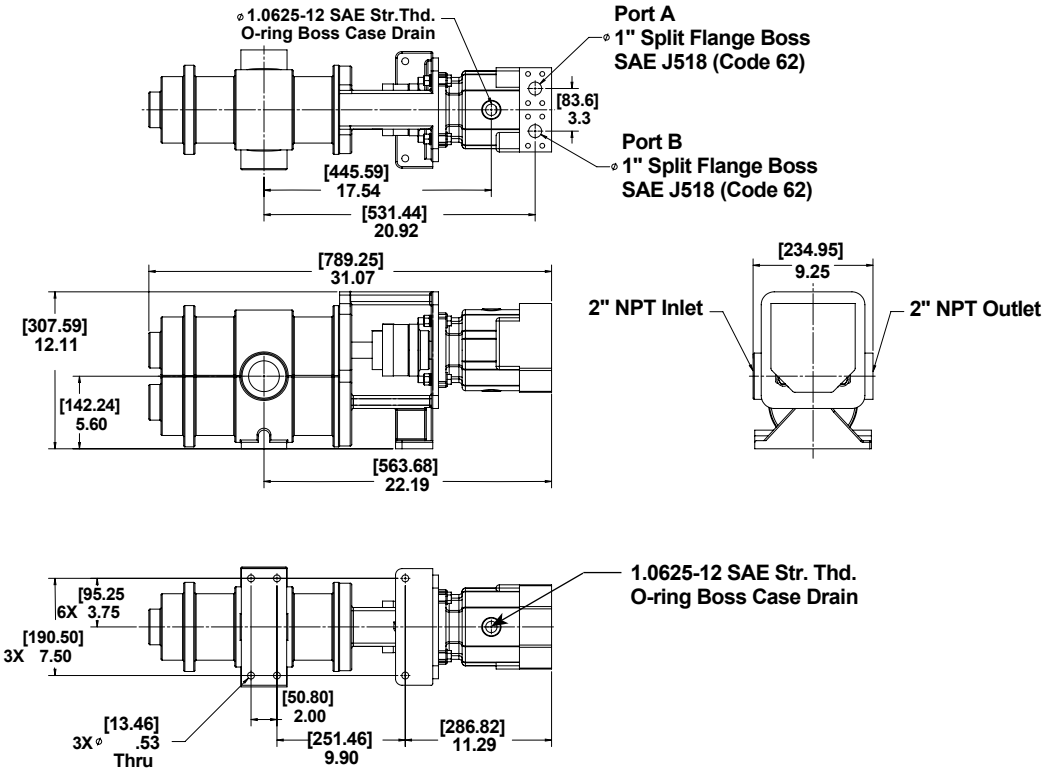

3150 – Edwards Pump/Motor Assembly (3450-0075)

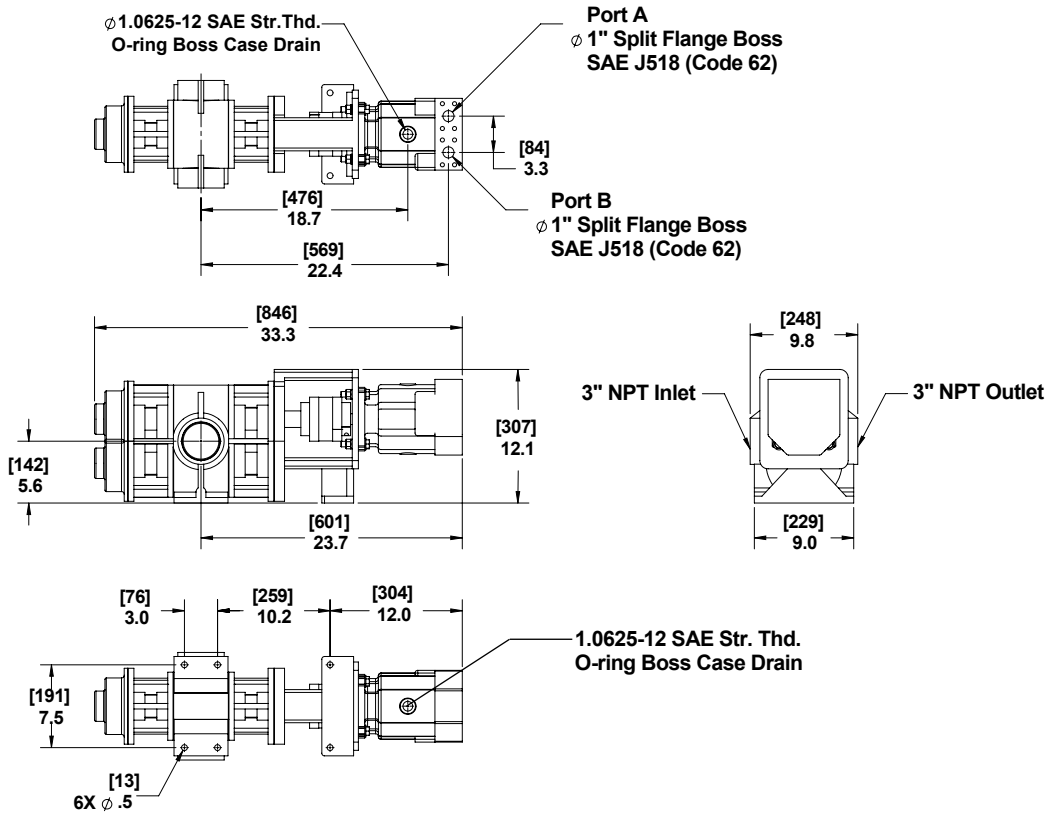

3300 – Edwards Pump/Motor Assembly (3450-0076)

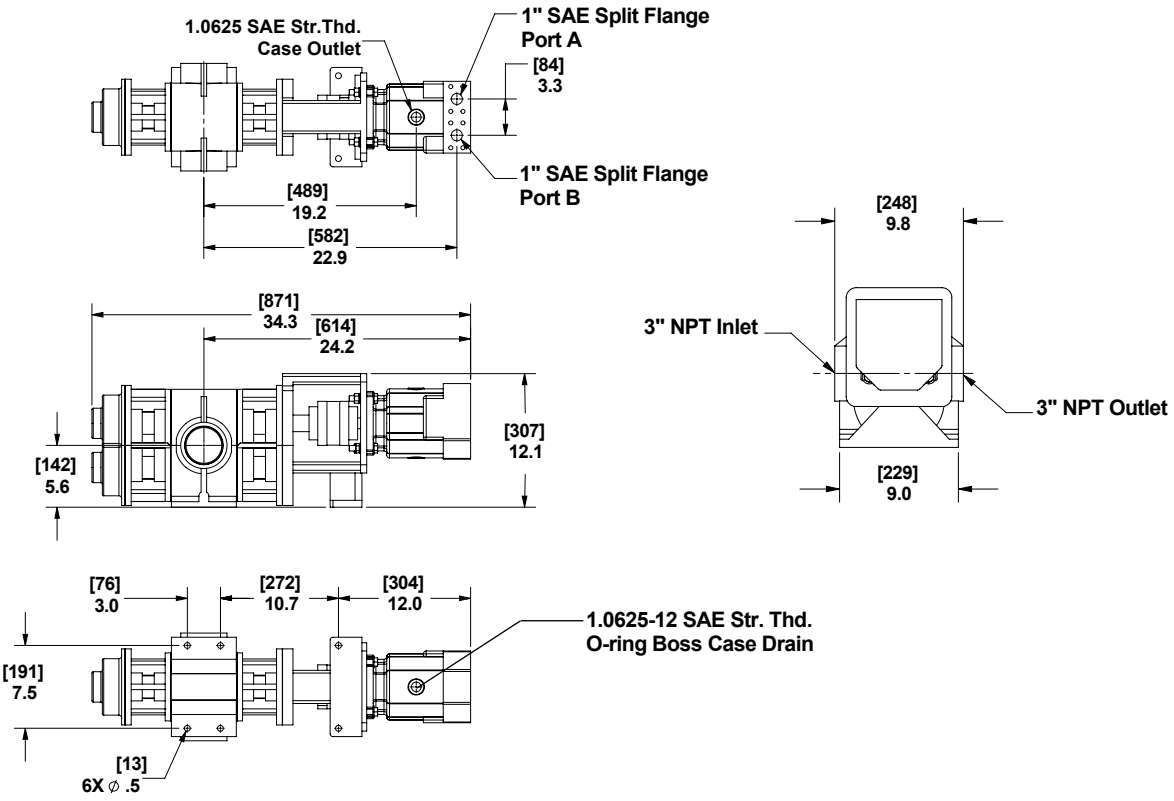

Trident Pump/Motor Assembly Parts

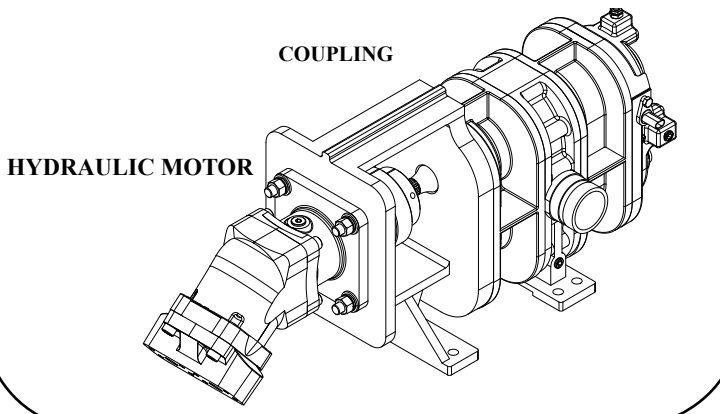

	TRIDENT FOAM PUMPS		
8	Foam Pump, Trident, #3020	Foam Pump	8000-1018
9	Foam Pump, Trident, #3040	Foam Pump	8000-1019
10	Foam Pump, Trident, #3060	Foam Pump	8000-1019
11	Foam Pump, Trident, #3090	Foam Pump	8000-1020
12	Foam Pump, Trident, #3150	Foam Pump	8000-1021
13	Foam Pump, Trident, #3300	Foam Pump	8000-1022
14	Coupling Half, Pump End, #3020	Coupling Half	2740-1008
15	Coupling Half, Pump End, #3040	Coupling Half	2740-1008
16	Coupling Half, Pump End, #3060	Coupling Half	2740-1008
17	Coupling Half, Pump End, #3090	Coupling Half	2740-1009
18	Coupling Half, Pump End, #3150	Coupling Half	2740-1003
19	Coupling Half, Pump End, #3300	Coupling Half	2740-1005
20	Coupling Insert, Center, #3020	Coupling Center	2729-1002
21	Coupling Insert, Center, #3040	Coupling Center	2729-1002
22	Coupling Insert, Center, #3060	Coupling Center	2729-1002
23	Coupling Insert, Center, #3090	Coupling Center	2729-1003
24	Coupling Insert, Center, #3150	Coupling Center	2729-1003
25	Coupling Insert, Center, #3300	Coupling Center	2729-1004
26	Coupling Half, Hyd Motor, #3020	Coupling Half	2740-1001
27	Coupling Half, Hyd Motor, #3040	Coupling Half	2740-1001
28	Coupling Half, Hyd Motor, #3060	Coupling Half	2740-1001
29	Coupling Half, Hyd Motor, #3090	Coupling Half	2740-1003
30	Coupling Half, Hyd Motor, #3150	Coupling Half	2740-1003
31	Coupling Half, Hyd Motor, #3300	Coupling Half	2740-1005
32	Hydraulic Motor, #3020	Hydraulic Motor	2500-0026
33	Hydraulic Motor, #3040	Hydraulic Motor	2500-0026
34	Hydraulic Motor, #3060	Hydraulic Motor	2500-0026
35	Hydraulic Motor, #3090	Hydraulic Motor	2500-0026
36	Hydraulic Motor, #3150	Hydraulic Motor	2500-0026
37	Hydraulic Motor, #3300	Hydraulic Motor	2500-1005

3020 – Trident Pump/Motor Assembly (P/N 3450-1041)

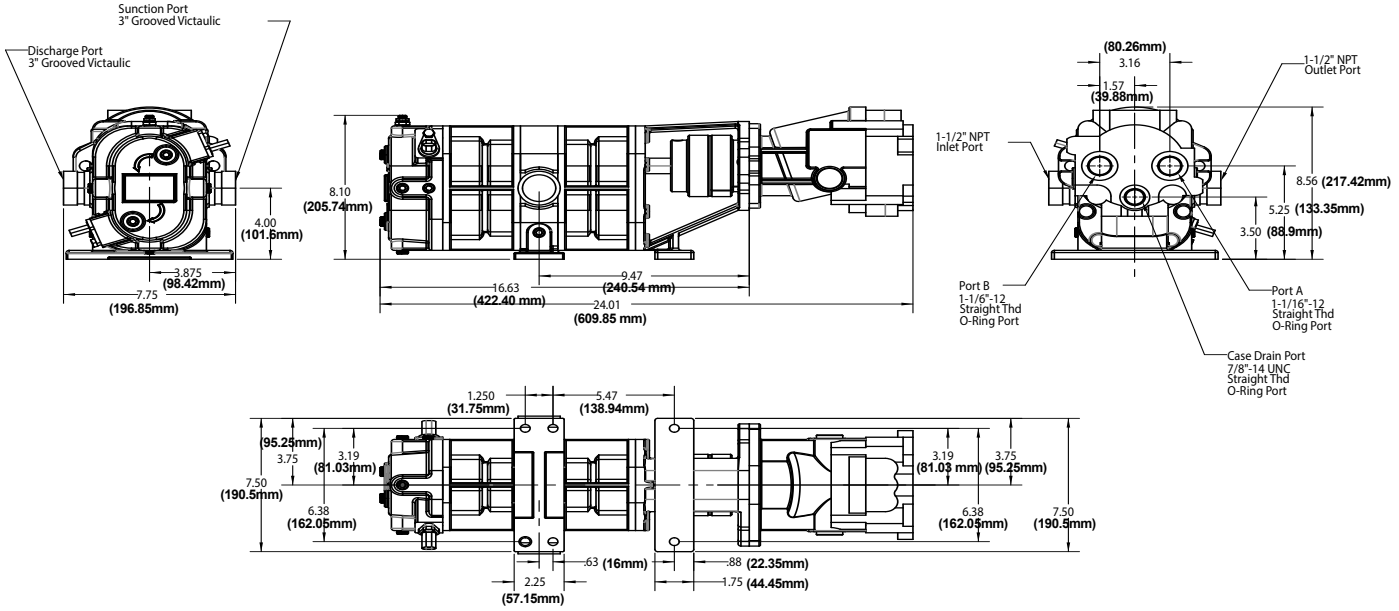

3040 (P/N 3450-1042) & 3060 (P/N 3450-1043)– Trident Pump/Motor Assembly

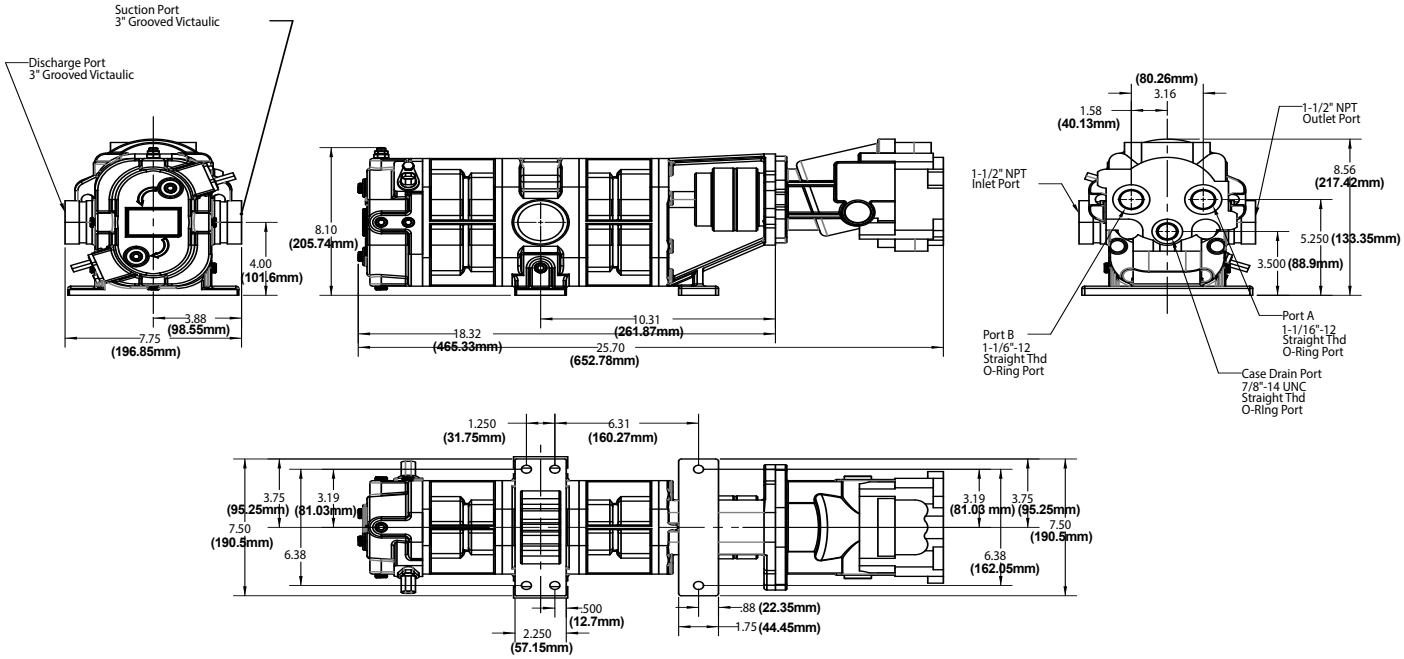

3090 – Trident Pump/Motor Assembly (P/N 3450-1044)

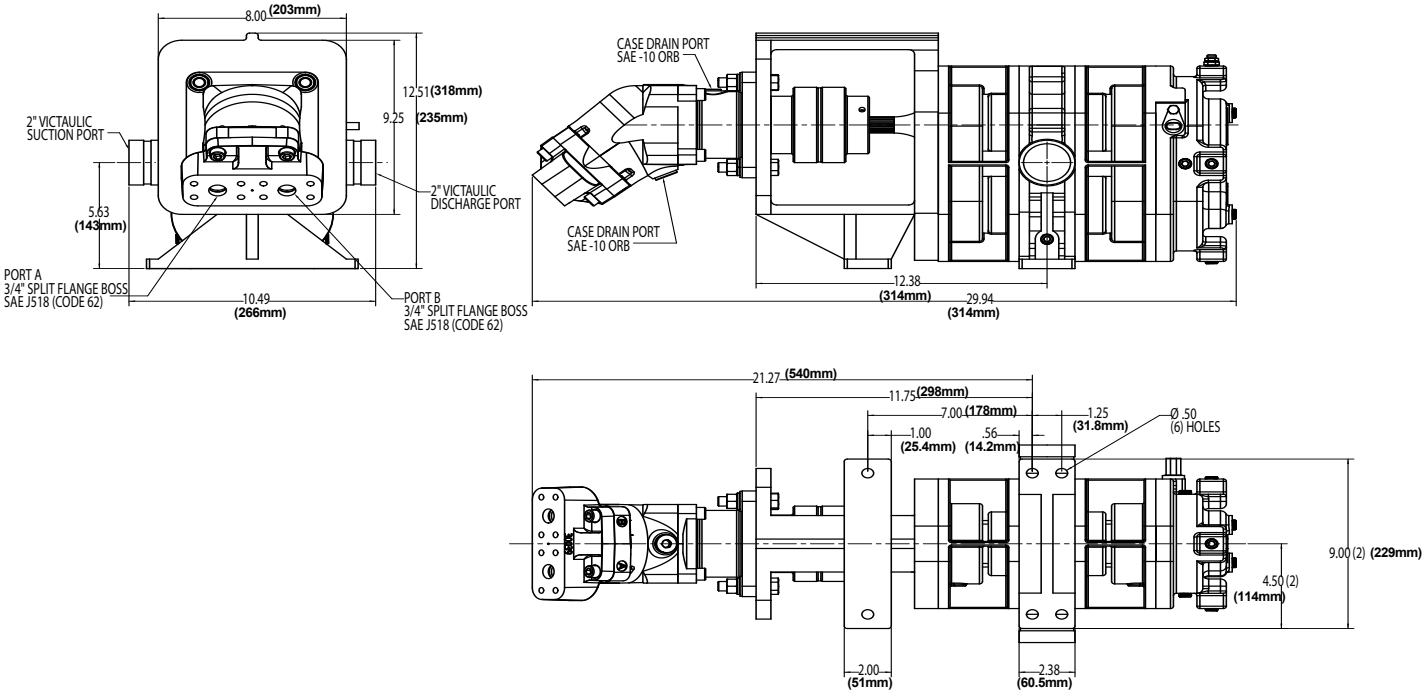

3150 – Trident Pump/Motor Assembly (P/N 3450-1045)

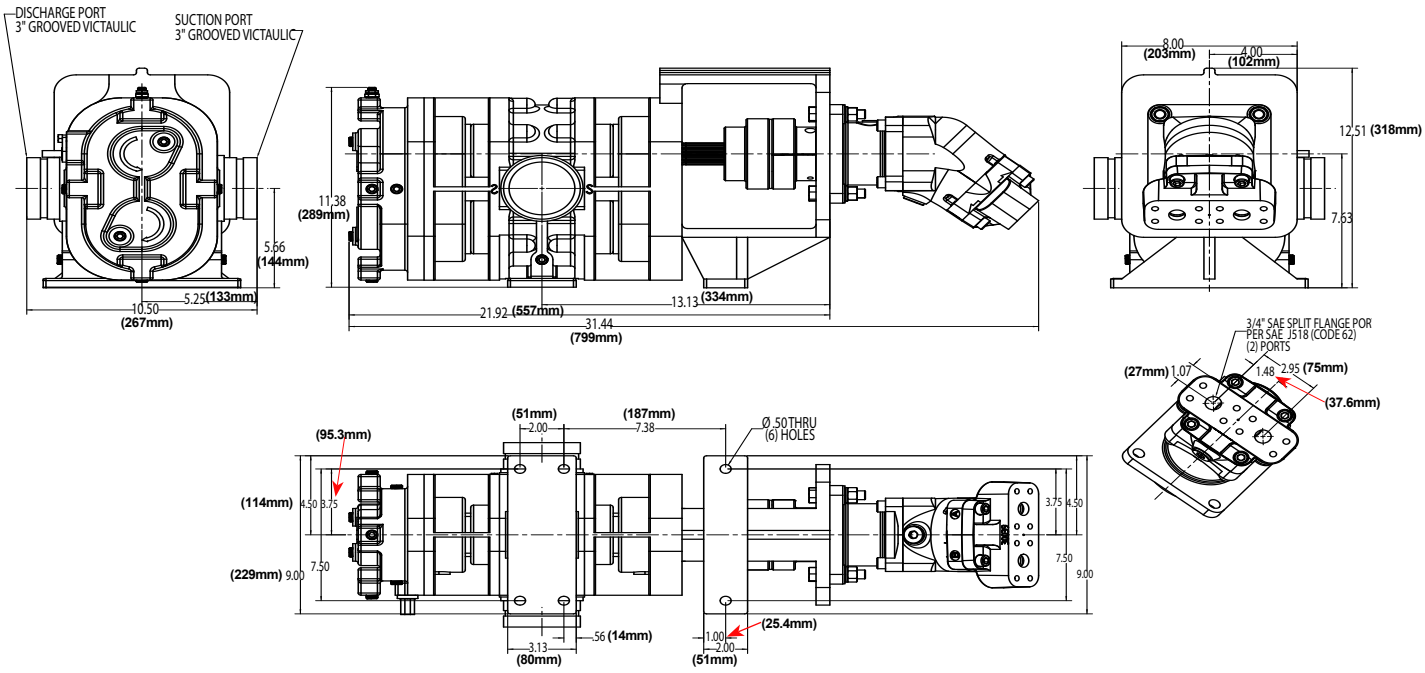

3300 – Trident Pump/Motor Assembly (P/N 3450-1046)

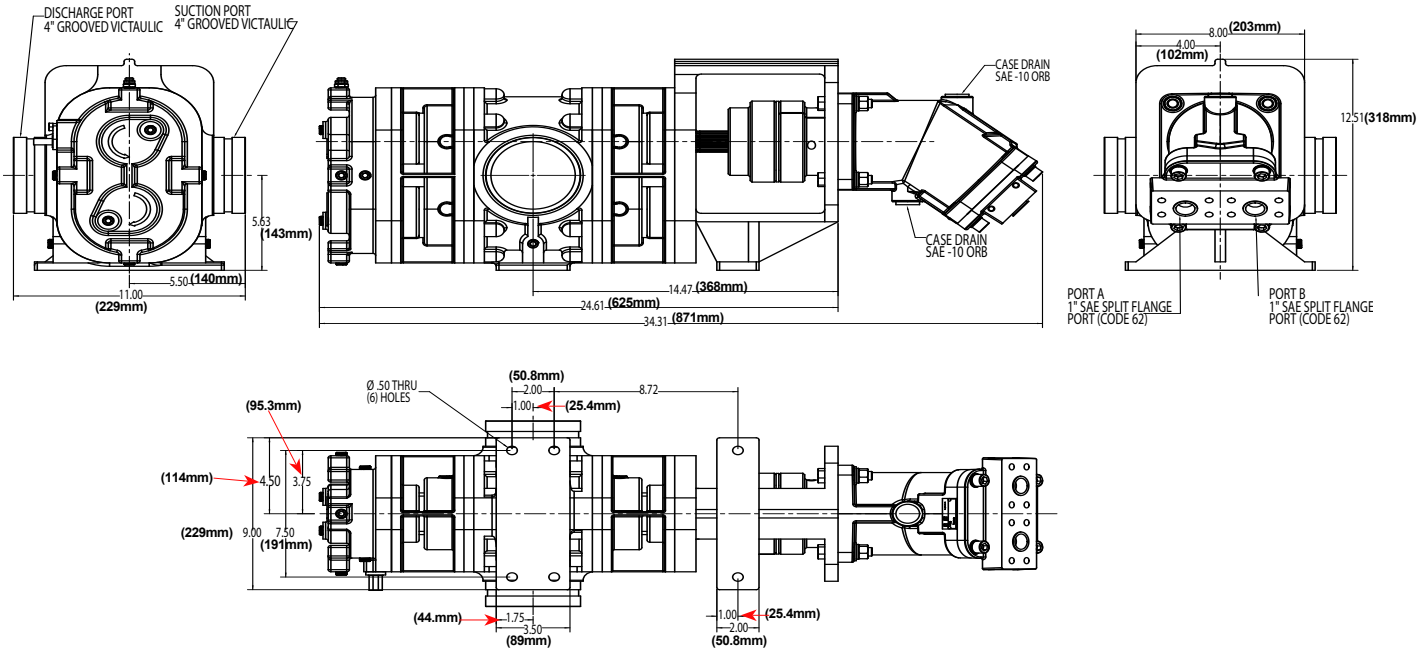

Limited Warranty

Fire Research Corp. (FRC), as supplier of FoamPro, warrants to the original purchaser, each new pump, system or other product of its own manufacture, for a period of two years from the date of shipment from the factory, to be free from defects in material and workmanship under normal use and service. “Normal use and service” means not in excess of recommended maximum speeds, pressures, and temperatures, or handling fluids not compatible with components materials, as noted in applicable FoamPro product catalogs, technical literature, and instructions. This warranty shall not apply to any pump, system or other product which shall have been repaired or altered to adversely affect the performance or reliability of the pump, system or other product.

Neither this warranty nor any implied warranty apply to damage or harm caused by any or all of the following: (1) Freight damage; (2) Freezing damage; (3) Damage caused by parts and/or accessories or components not obtained from or approved by FRC; (4) ANY CONSEQUENTIAL OR INCIDENTAL DAMAGES, OTHER THAN INJURY TO THE PERSON, ARISING FROM THE USE OF ANY PUMP OR OTHER PRODUCT MANUFACTURED BY FRC EXCEPT in states that do not allow the exclusion or limitation of incidental or consequential damages; (5) Damage due to misapplication and/or misuse; (6) Normal wear of moving parts or components affected by moving parts.

The liability of FRC under the foregoing warranty is limited to the repair or replacement at FRC's option without charge for labor or materials of any parts upon return of the entire pump, system or other product or of the particular part to the FRC factory within the warranty period, at the sole expense of the purchaser, which part shall upon examination appear to FRC’s satisfaction to have been defective in material and workmanship. The liability of FRC under any theory of recovery (except any express warranty where the remedy is set forth in the above paragraph) for loss, harm or damage, shall be limited to the lesser of the actual loss, harm or damage or the purchase price of the involved pump, system or other product when sold by FRC to its customer.

FRC expressly warrants its pumps and other products as above stated. THERE ARE NO OTHER EXPRESS WARRANTIES. ANY IMPLIED WARRANTIES, INCLUDING IMPLIED WARRANTY OF MERCHANTABILITY OR OF FITNESS FOR A PARTICULAR PURPOSE, ARE LIMITED IN DURATION TO TWO YEARS FROM THE DATE OF PURCHASE BY THE ORIGINAL PURCHASER EXCEPT in states that do not allow time limitations on implied warranties. THERE IS NO IMPLIED WARRANTY OF FITNESS FOR A PARTICULAR PURPOSE OR MERCHANTABILITY WHEN THIS PRODUCT IS PUT TO RENTAL USE.

No person including any dealer or representative of FoamPro is authorized to make any representation or warranty concerning FRC’s FoamPro products on behalf of FRC, or to assume for FRC the obligations contained in this warranty. FRC reserves the right to make changes in design and other changes and improvements upon its products without imposing any obligations upon itself to install the same, upon its existing products then in process or manufacture.

This warranty gives you specific legal rights, and you may also have other rights which vary from state to state.

IMPORTANT NOTICE

It is imperative to package all FoamPro components properly, before shipment (with Return Goods Authorization attached) back to FRC. The FoamPro contains electronic components that may receive damage from improper shipping procedures! All FoamPro components shipped back to FRC will pass through Quality Control Inspection, and will be photographed after the box is opened. Any shipping damage, such as superficial scratches, nicks, etc., to the unit makes it unusable (even after the internal warranty problem is repaired) and thus must be refinished to “like-new” condition during the warranty process. You are responsible for any physical damage occurring to FoamPro components at your facility and during shipment back to FRC.

Package the FoamPro, complete with all the recommended parts the Customer Service representative requires (i.e., Digital Display control with all premolded wire cables etc.) in its original carton with the Styrofoam and other packaging materials, as it was received at your facility. FRC appreciates your attention in this matter, as we feel it will help us to serve you in a better fashion, while keeping the cost of the FoamPro product competitive. Thank you.

FOAMPRO®
A Safe Fleet Brand

26 Southern Blvd. • Nesconset, NY 11767 USA
Phone 800-533-9511 • FAX 816-892-3178
www.foampro.com

FRC
A Safe Fleet Brand

26 Southern Blvd. • Nesconset, NY 11767 USA
Phone 800-645-0074 • FAX 816-892-3178
www.fireresearch.com

NOTES

DANGER

PERSONAL RESPONSIBILITY CODE

The member companies of FEMSA that provide emergency response equipment and services want responders to know and understand the following:

1. Firefighting and Emergency Response are inherently dangerous activities requiring proper training in their hazards and the use of extreme caution at all times.
2. It is your responsibility to read and understand any user's instructions, including purpose and limitations, provided with any piece of equipment you may be called upon to use.
3. It is your responsibility to know that you have been properly trained in Firefighting and/or Emergency Response and in the use, precautions, and care of any equipment you may be called upon to use.
4. It is your responsibility to be in proper physical condition and to maintain the personal skill level required to operate any equipment you may be called upon to use.
5. It is your responsibility to know that your equipment is in operable condition and has been maintained in accordance with the manufacturer's instructions.
6. Failure to follow these guidelines may result in death, burns or other severe injury.

FEMSA

Fire and Emergency Manufacturers and Services Association, Inc.
P.O. Box 147, Lynnfield , MA 01940 www.FEMSA.org